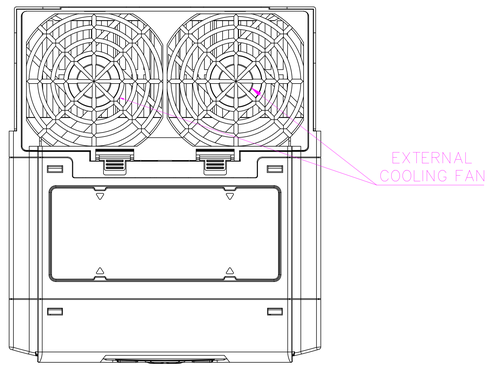

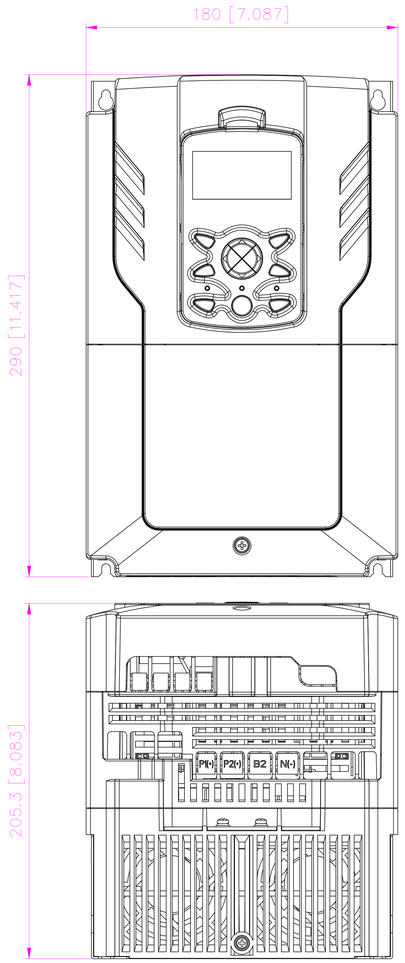

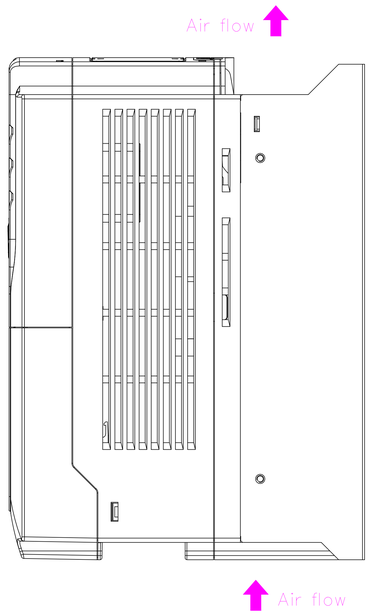

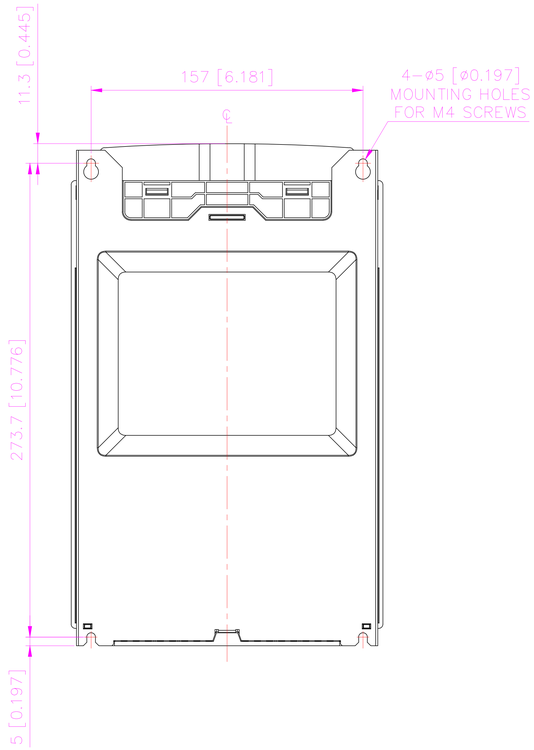

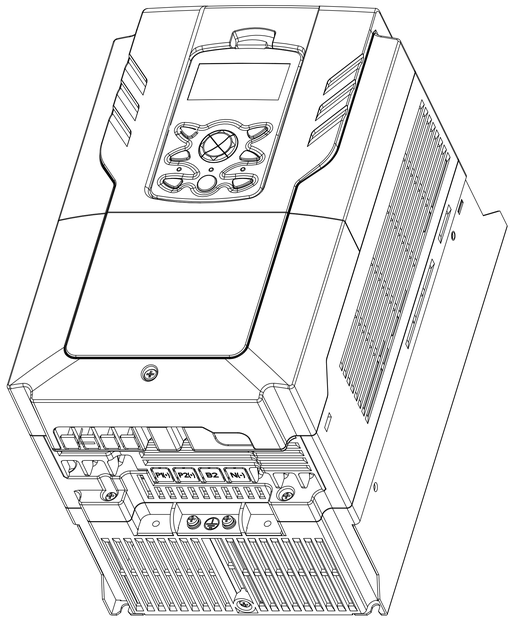

3D View

정 / 개 CHANGE	LS IS			LSLV-H100	매 수 SHEETS
	삼 각 법 3RD ANGLE PROJECTION	척 도 SCALE / , NS	단 위 DIMENSION MM	작 성 일 DATE . .	도면명칭 TITLE: H100 EXTERNAL DIMENSION DRAWING FRAME SIZE B
	THIS DOCUMENT AND INFORMATION CONTAINED IN IT ARE CONFIDENTIAL AND CANNOT BE COPIED OR DISCLOSED IN WHOLE OR IN PART WITHOUT PERMISSION				도면번호 DWG. NO.
					관련도번 REF. NO.

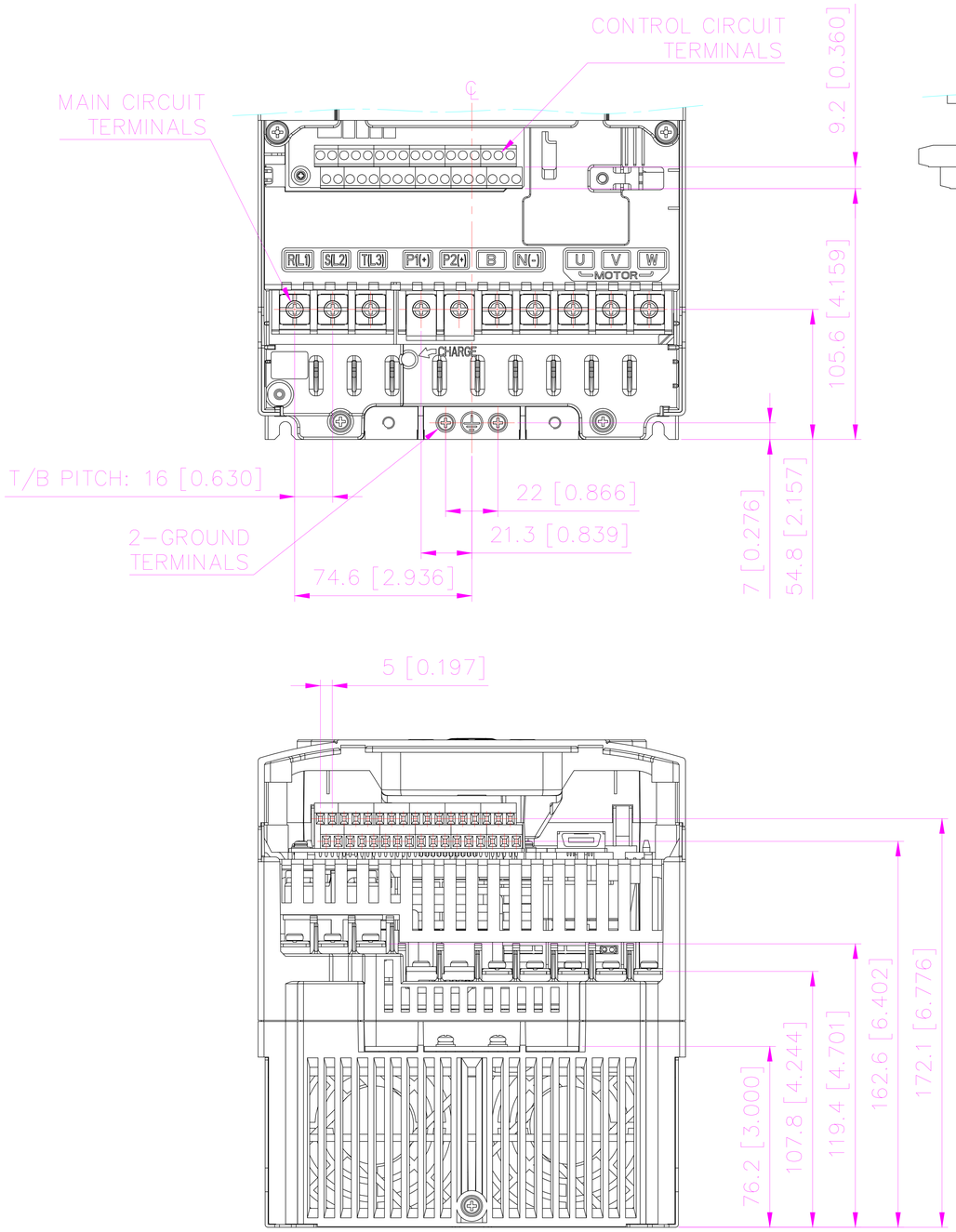

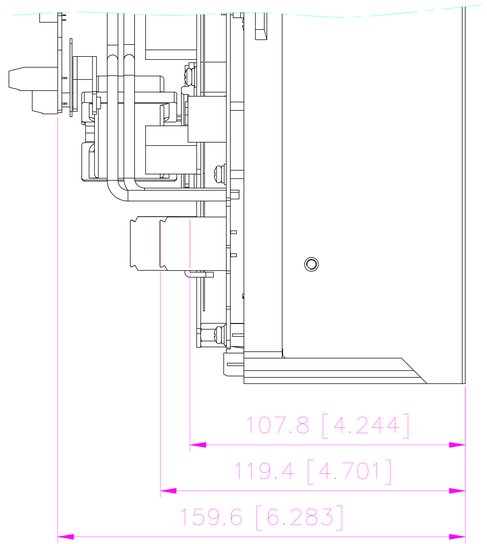

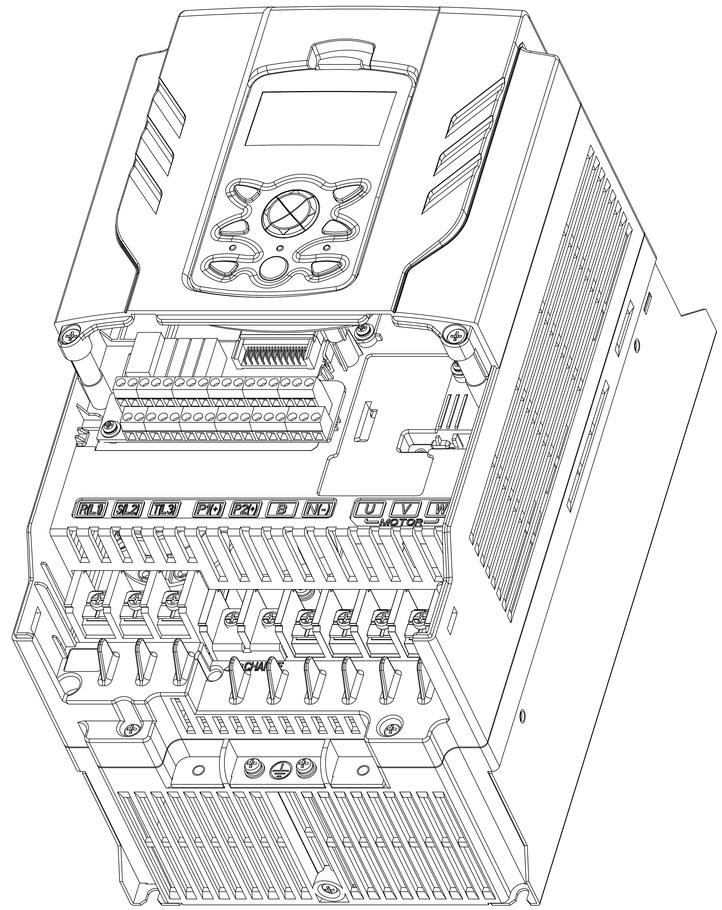

3D View

After removing
Covers & Cable guide brkt

개정 CHANGE	LS IS				LSLV-H100	매 수 SHEETS
	삼 각 법 3RD ANGLE PROJECTION	척 도 SCALE	단 위 DIMENSION	작 성 일 DATE	도면명칭 TITLE	H100 TERMINAL & WIRING DRAWING FRAME SIZE B
		/ , NS	MM	. .		
	THIS DOCUMENT AND INFORMATION CONTAINED IN IT ARE CONFIDENTIAL AND CANNOT BE COPIED OR DISCLOSED IN WHOLE OR IN PART WITHOUT PERMISSION				도면번호 DWG. NO.	
					관련도번 REF. NO.	

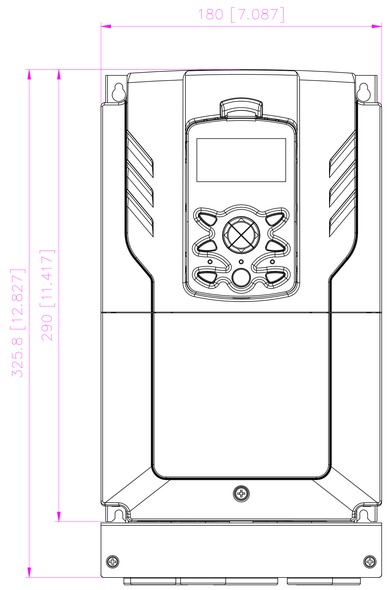

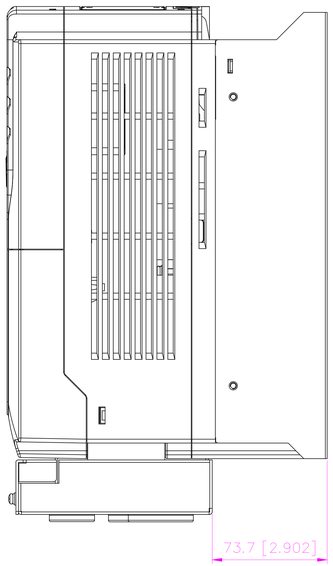

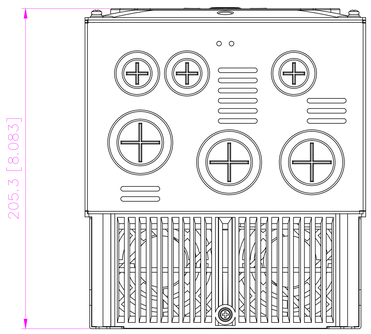

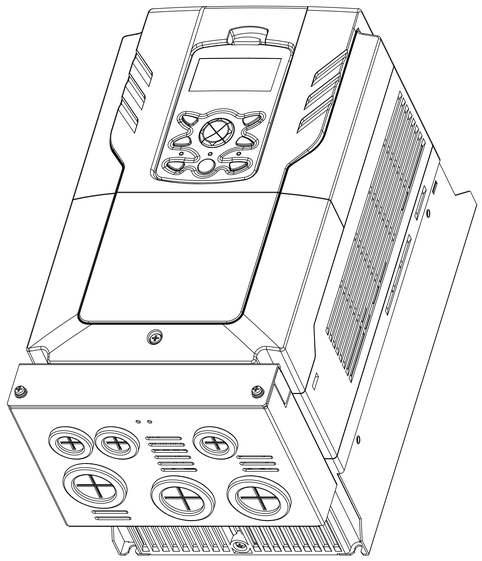

3D View

Drive + Conduit Option

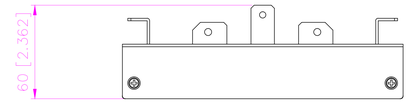

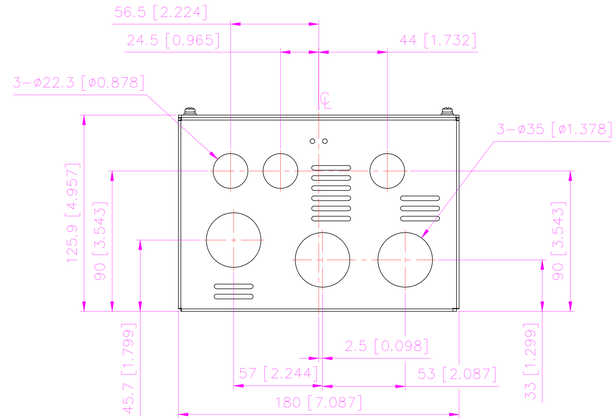

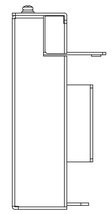

* After removing Rubber Packing

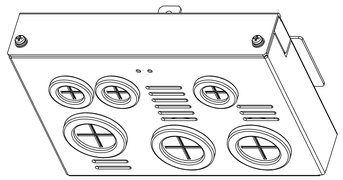

3D View

Conduit Option

개정 CHANGE	LS IS			LSLV-H100	매 수 SHEETS
	삼 각 법 3RD ANGLE PROJECTION	척 도 SCALE / , NS	단 위 DIMENSION MM	작 성 일 DATE . .	도면명칭 TITLE: H100 CONDUIT OPTION DRAWING FRAME SIZE B
	THIS DOCUMENT AND INFORMATION CONTAINED IN IT ARE CONFIDENTIAL AND CANNOT BE COPIED OR DISCLOSED IN WHOLE OR IN PART WITHOUT PERMISSION				도면번호 DWG. NO.
					관련도번 REF. NO.

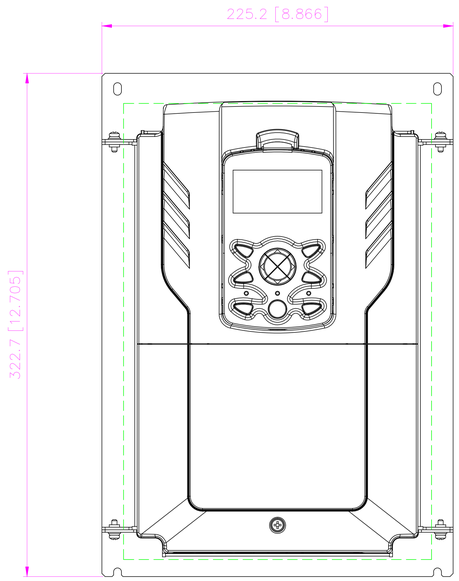

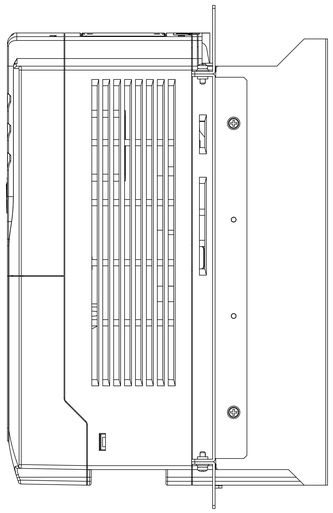

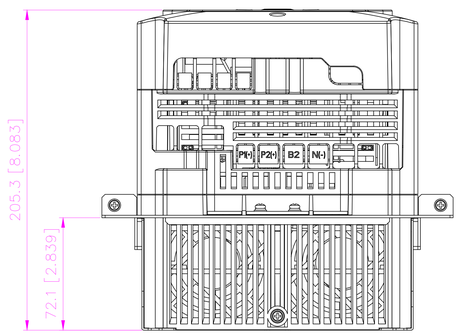

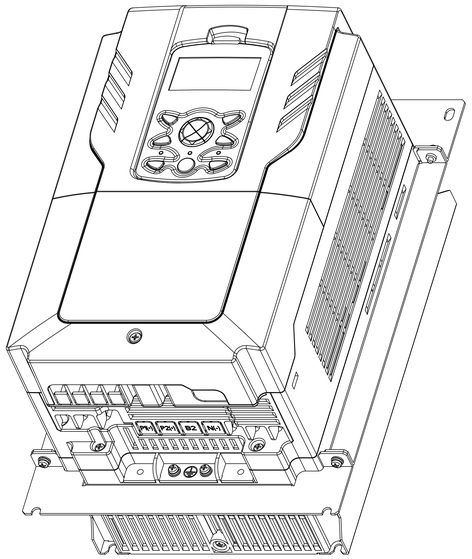

3D View

Drive + Flange Option

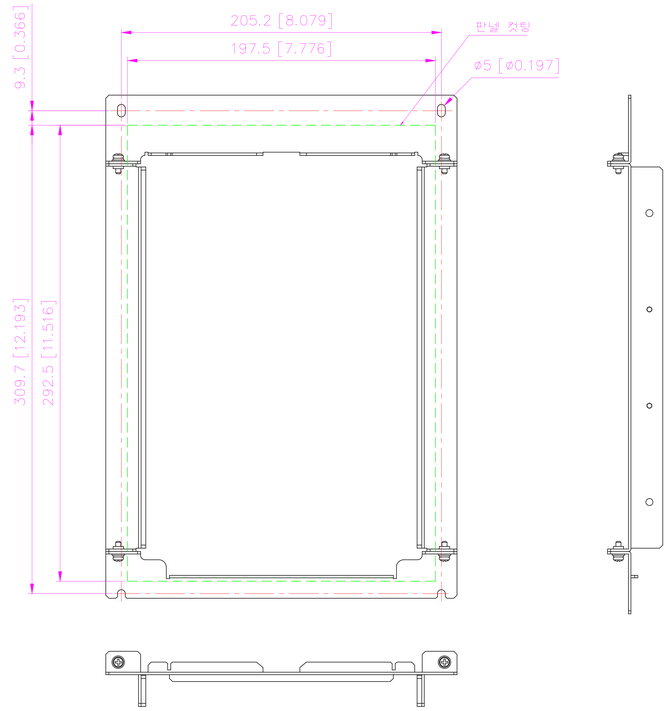

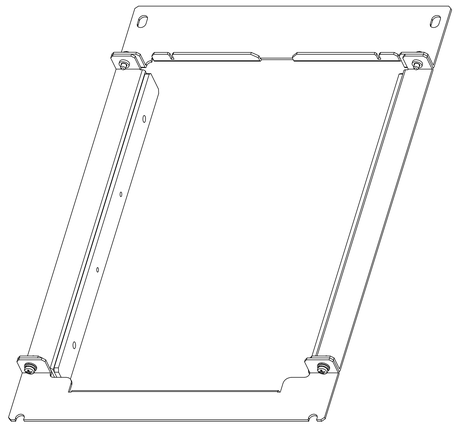

3D View

Flange Option

개정 CHANGE		LS IS			LSLV-H100	매 수 SHEETS
		삼 각 법 3RD ANGLE PROJECTION	척 도 SCALE / , NS	단 위 DIMENSION MM	작 성 일 DATE . .	도면명칭 TITLE: H100 FLANGE OPTION DRAWING FRAME SIZE B
		THIS DOCUMENT AND INFORMATION CONTAINED IN IT ARE CONFIDENTIAL AND CANNOT BE COPIED OR DISCLOSED IN WHOLE OR IN PART WITHOUT PERMISSION				도면번호 DWG. NO.
						관련도번 REF. NO.

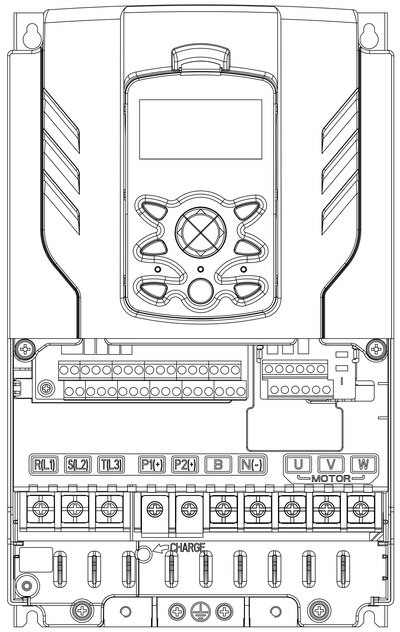

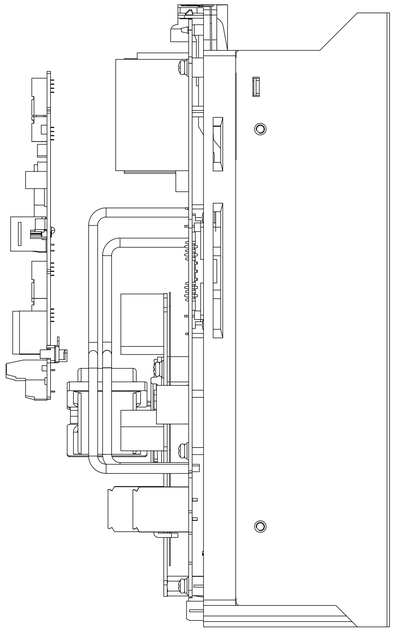

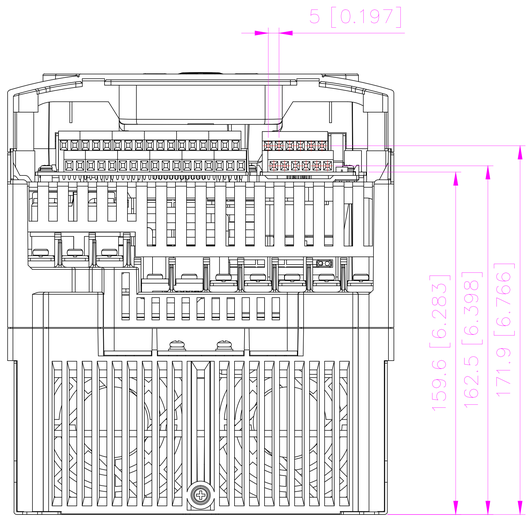

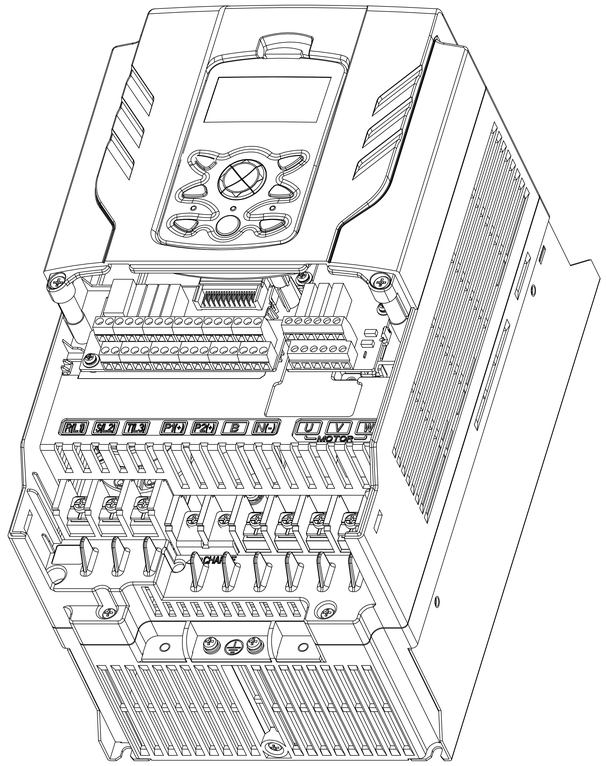

3D View

Drive + Option Module

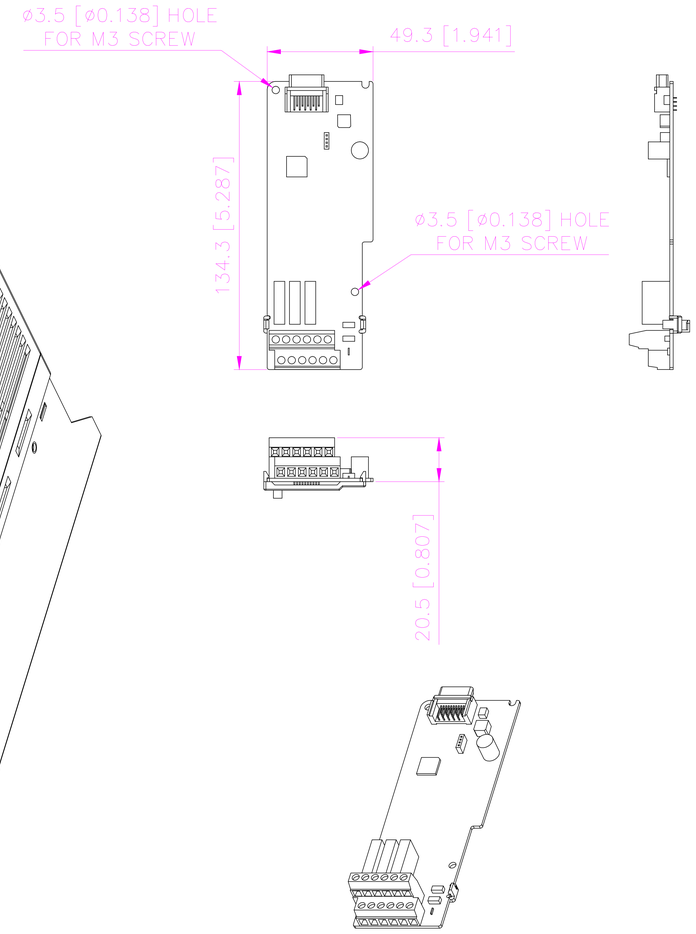

3D View

Option Module
(EXTENSION I/O)

개정 CHANGE	LS IS				LSLV-H100	매 수 SHEETS
	삼 각 법 3RD ANGLE PROJECTION	척 도 SCALE	단 위 DIMENSION	작 성 일 DATE	도면명칭 TITLE	H100 OPTION MODULE DRAWING (EXTENSION IO) FRAME SIZE B
		/ , NS	MM	. .		
	THIS DOCUMENT AND INFORMATION CONTAINED IN IT ARE CONFIDENTIAL AND CANNOT BE COPIED OR DISCLOSED IN WHOLE OR IN PART WITHOUT PERMISSION				도면번호 DWG. NO.	
					관련도번 REF. NO.	

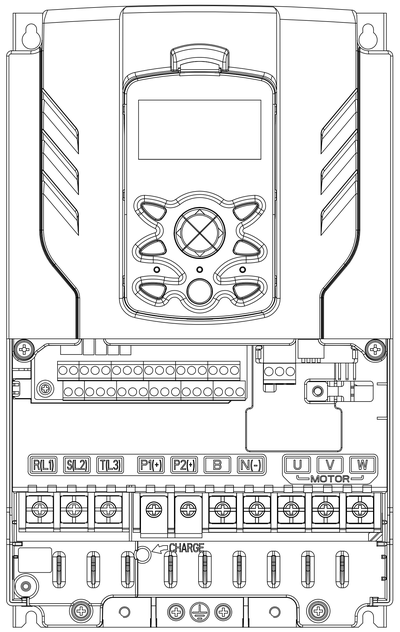

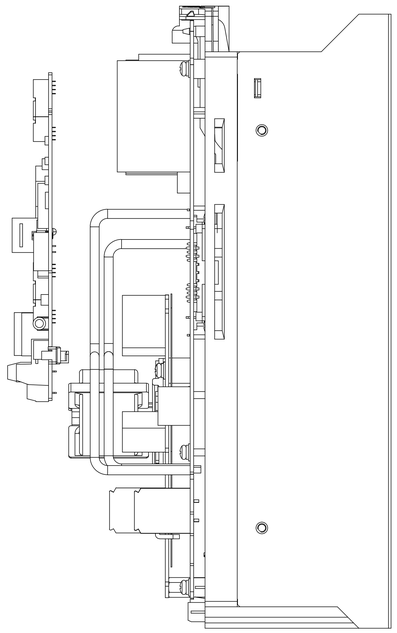

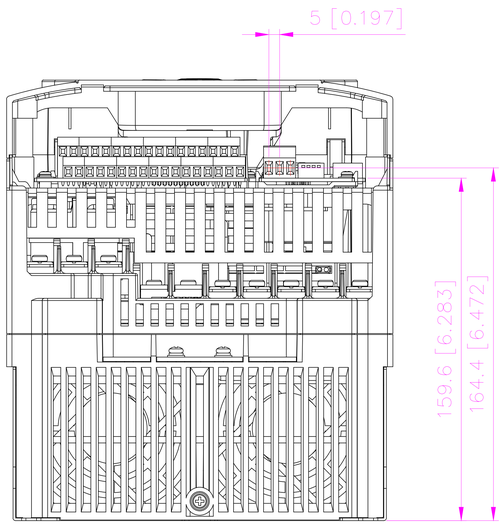

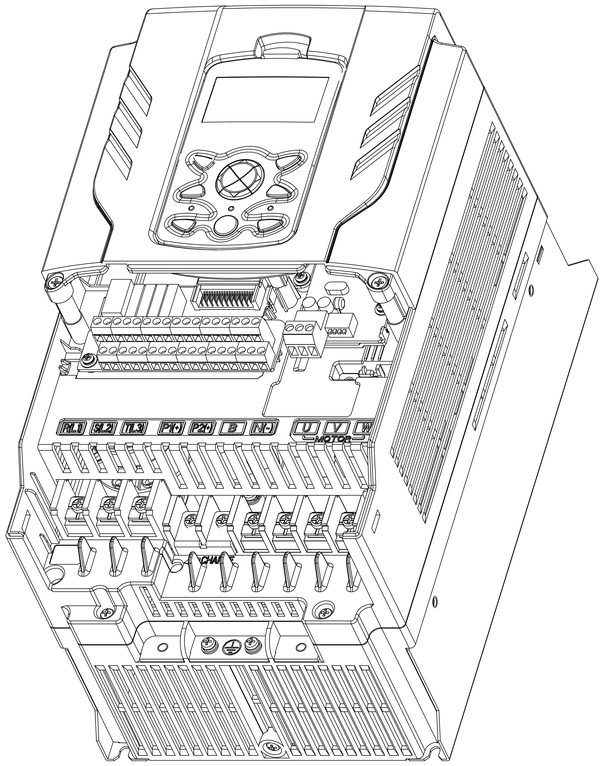

3D View

Drive + Option Module

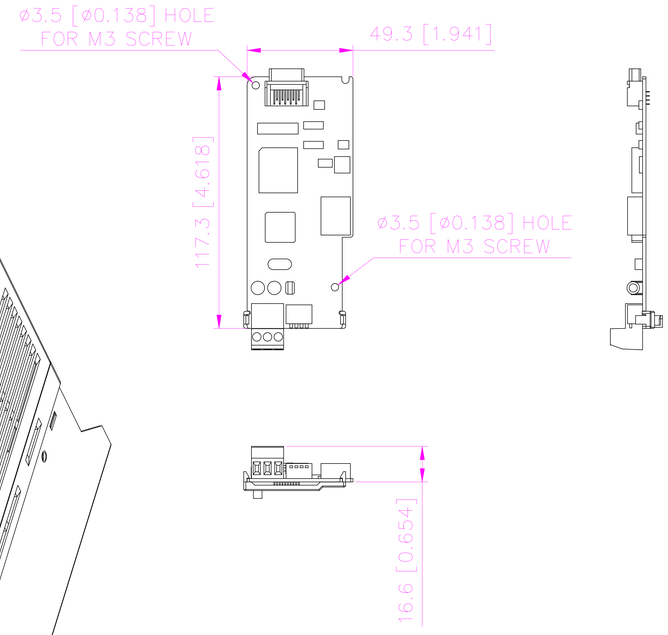

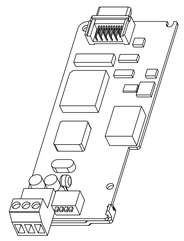

3D View

Option Module
(LONWORK)

개정 CHANGE		LS IS			LSLV-H100	매 수 SHEETS
		삼 각 법 3RD ANGLE PROJECTION	척 도 SCALE / , NS	단 위 DIMENSION MM	작 성 일 DATE . .	도면명칭 TITLE: H100 OPTION MODULE DRAWING (LONWORK) FRAME SIZE B
		THIS DOCUMENT AND INFORMATION CONTAINED IN IT ARE CONFIDENTIAL AND CANNOT BE COPIED OR DISCLOSED IN WHOLE OR IN PART WITHOUT PERMISSION				도면번호 DWG. NO.
						관련도번 REF. NO.

[MATCHED H100 DRIVES FOR FRAME SIZE B]

Item	Applied Motor	Phase / Voltage	Output Current	Weight	Heat Loss(W)
0150H100-2	ND: 20HP / 15kW	3ø / 230V	56.0A	10.1lb / 4.6kg	231
0150H100-4	ND: 20HP / 15kW	3ø / 460V	30.0A	10.1lb / 4.6kg	231
0185H100-4	ND: 25HP / 18.5kW	3ø / 460V	38.0A	10.6lb / 4.8kg	315

* HD: Heavy duty type for constant torque load
* ND: Normal duty type for variable torque load
* Heatloss is measured with 60Hz, 100% load and default carrier frequency.
* Refer to product manual for additional details and specifications

[TERMINAL SPECIFICATION FOR FRAME SIZE B]

Item	Input / Output Terminal Screw Size	Input / Output Screw Torque	Control Circuit Terminal Screw Size	Control Circuit Screw Torque
0150H100-2	M5	4.0 ~ 10.2 Kgf.cm 0.4 ~ 1.0 Nm 3.5 ~ 8.9 lbf.in	M2 (P1~P7/CM/VR/V1/I2/AO/Q1/EG/24/TI/TO/SA,SB,SC/S+,S-,SG) M2.6 (A1,B1,C1)	M2 2.2 ~ 2.5 Kgf.cm 0.22 ~ 0.25 Nm 1.91 ~ 2.17 lbf.in M2.6 4.0 Kgf.cm 0.4 Nm 3.47 lbf.in
0150H100-4				
0185H100-4				

정 CHANGE 개	LS IS			LSLV-S100	매 수 SHEETS
	삼 각 법 3RD ANGLE PROJECTION	척 도 SCALE / , NS	단 위 DIMENSION MM	작 성 일 DATE . .	도면명칭 TITLE: H100 SPECIFICATION FRAME SIZE B
	THIS DOCUMENT AND INFORMATION CONTAINED IN IT ARE CONFIDENTIAL AND CANNOT BE COPIED OR DISCLOSED IN WHOLE OR IN PART WITHOUT PERMISSION				도면번호 DWG. NO.
					관련도번 REF. NO.