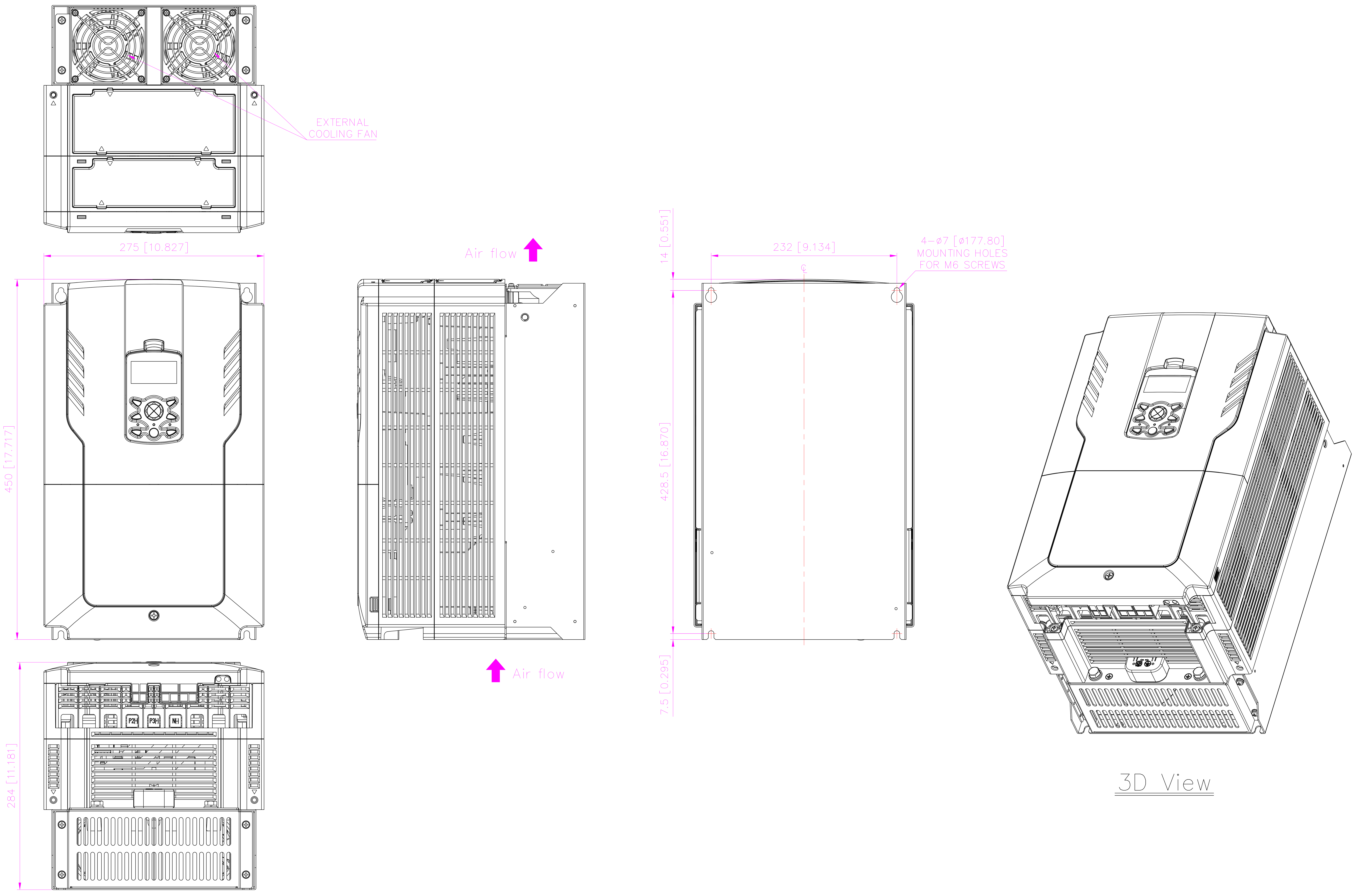


| 개정 CHANGE | | |
|---|---|---|

LS IS

LSLV-H100

매수 SHEETS

| 삼각법 3RD ANGLE PROJECTION | 척도 SCALE | 단위 DIMENSION | 작성일 DATE |
|---|---|---|---|
| | / , NS | MM | . . |

| | |
|---|---|
| 도면명칭 TITLE | H100 EXTERNAL DIMENSION DRAWING FRAME SIZE D |
| 도면번호 DWG. NO. | |
| 관련도번 REF. NO. | |

THIS DOCUMENT AND INFORMATION CONTAINED IN IT ARE CONFIDENTIAL AND CANNOT BE COPIED OR DISCLOSED IN WHOLE OR IN PART WITHOUT PERMISSION

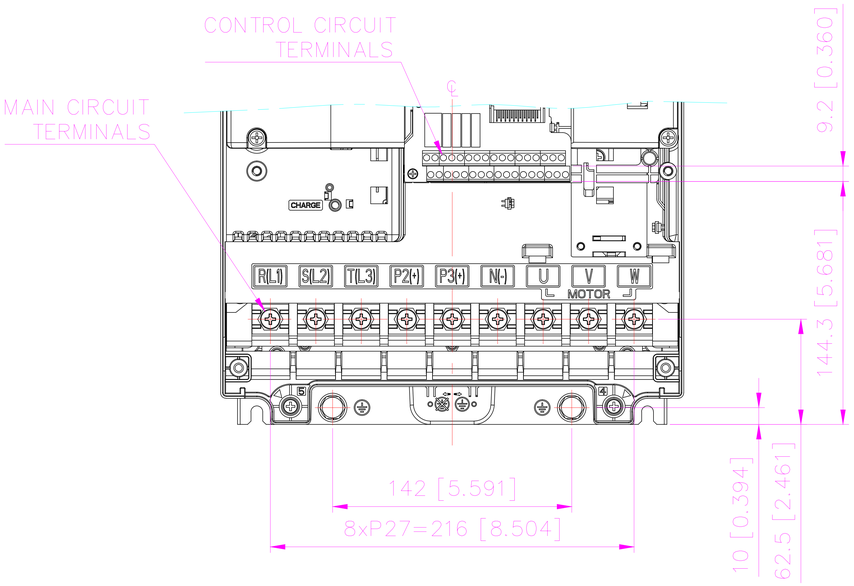


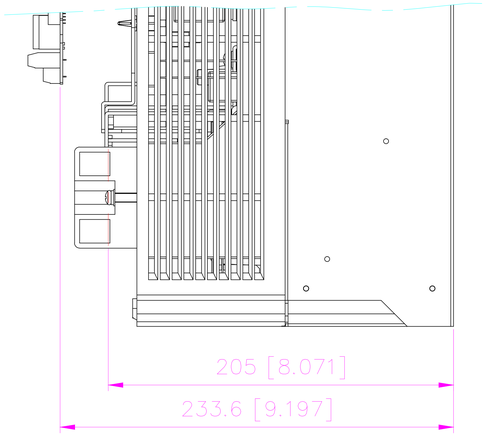


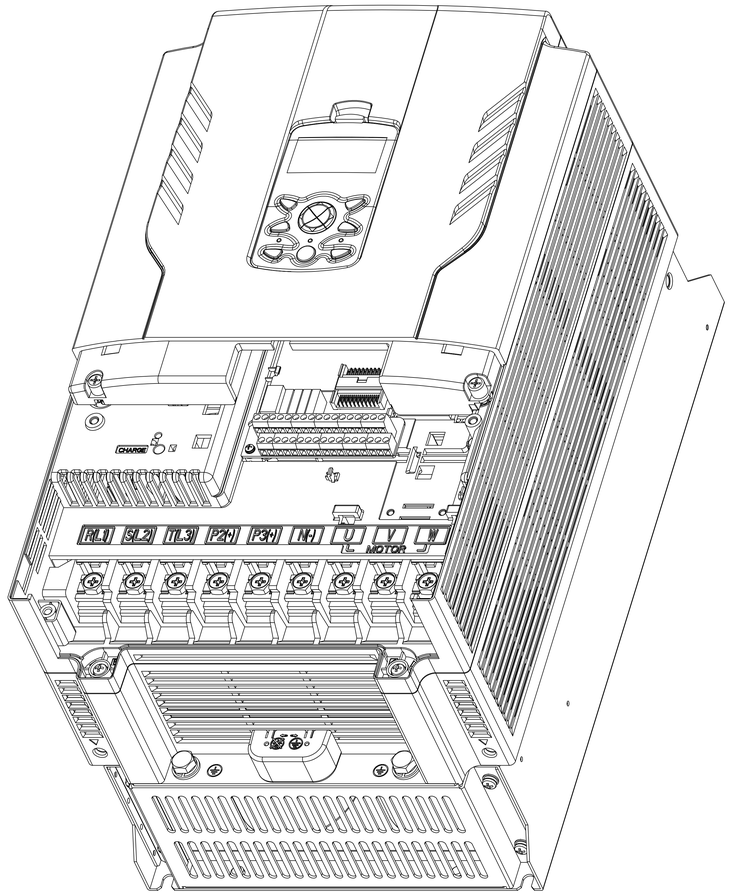


3D View
After removing
Covers & Cable guide brkt

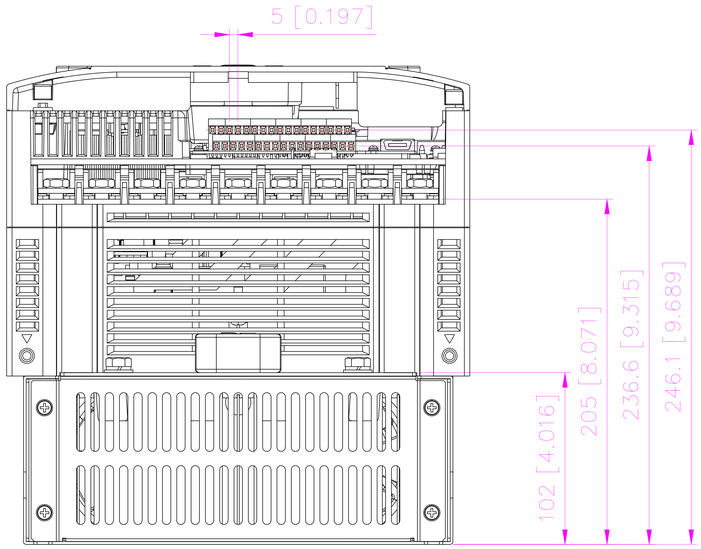


| | | | | | |
|---|---|---|---|---|---|
| 정 / 개 CHANGE | LS IS | | | LSLV-H100 | 매 수 SHEETS |
| | 삼 각 법 3RD ANGLE PROJECTION | 척 도 SCALE / , NS | 단 위 DIMENSION MM | 작 성 일 DATE . . | 도면명칭 TITLE: H100 TERMINAL & WIRING DRAWING FRAME SIZE D |
| | THIS DOCUMENT AND INFORMATION CONTAINED IN IT ARE CONFIDENTIAL AND CANNOT BE COPIED OR DISCLOSED IN WHOLE OR IN PART WITHOUT PERMISSION | | | | 도면번호 DWG. NO. |
| | | | | | 관련도번 REF. NO. |

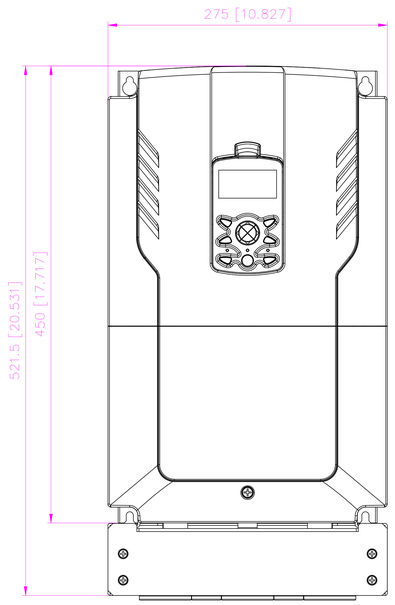


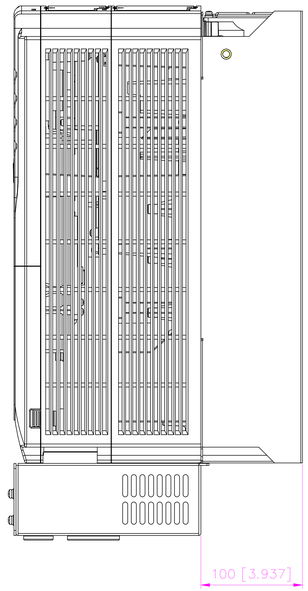


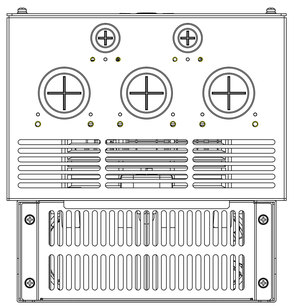

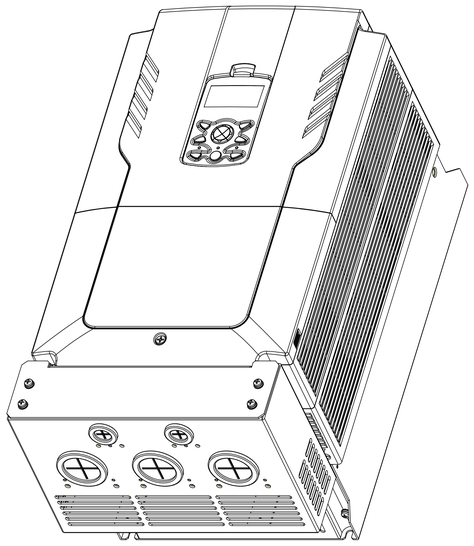

3D View
Drive + Conduit Option

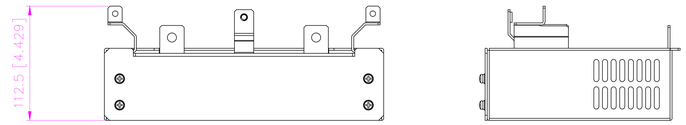


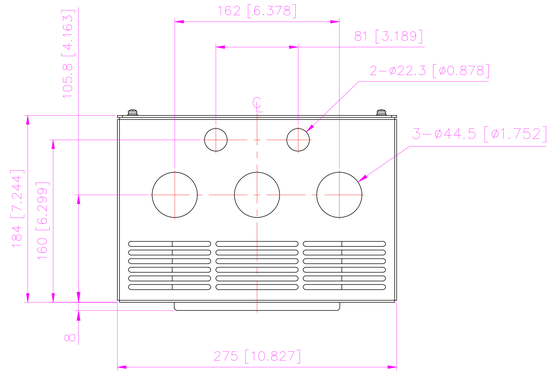


* After removing Rubber Packing

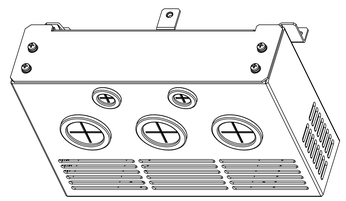

3D View
Conduit Option

| | | | | | |
|---|---|---|---|---|---|
| 정 개 CHANGE | | LS IS | | LSLV-H100 | 매 수 SHEETS |
| | 삼 각 법 3RD ANGLE PROJECTION | 척 도 SCALE / , NS | 단 위 DIMENSION MM | 작 성 일 DATE . . | 도면명칭 TITLE: H100 CONDUIT OPTION DRAWING FRAME SIZE D |
| | THIS DOCUMENT AND INFORMATION CONTAINED IN IT ARE CONFIDENTIAL AND CANNOT BE COPIED OR DISCLOSED IN WHOLE OR IN PART WITHOUT PERMISSION | | | | 도면번호 DWG. NO. |
| | | | | | 관련도번 REF. NO. |

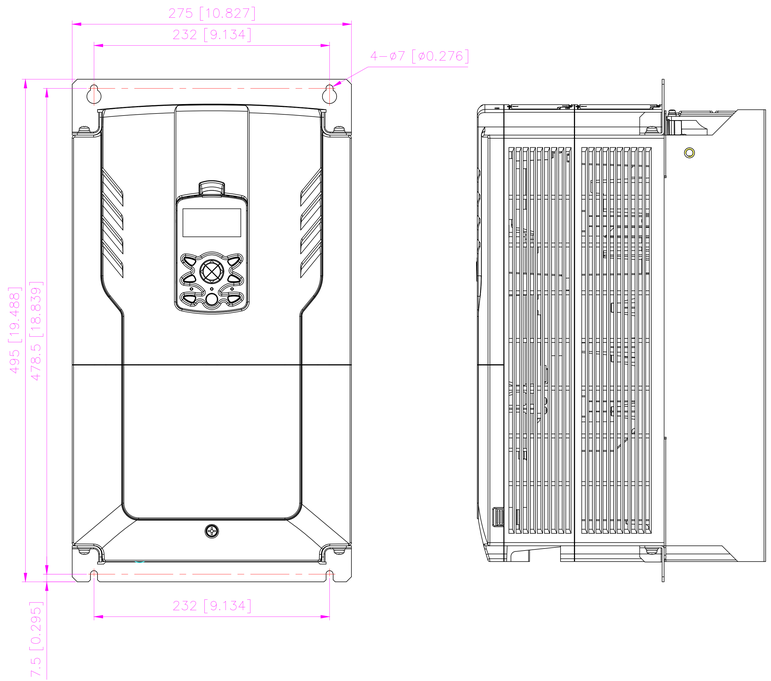




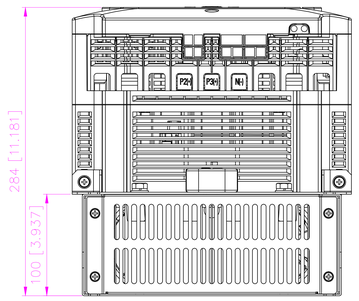


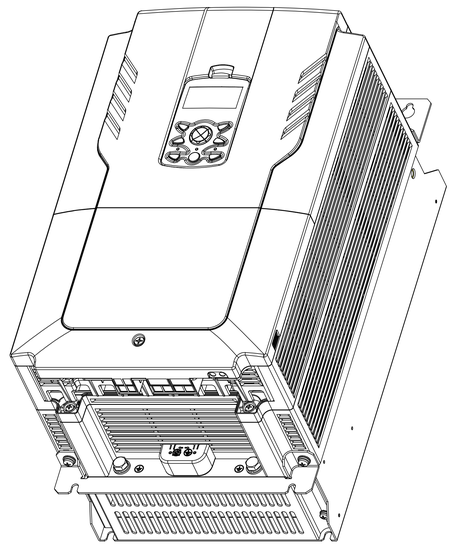

3D View
Drive + Flange Option

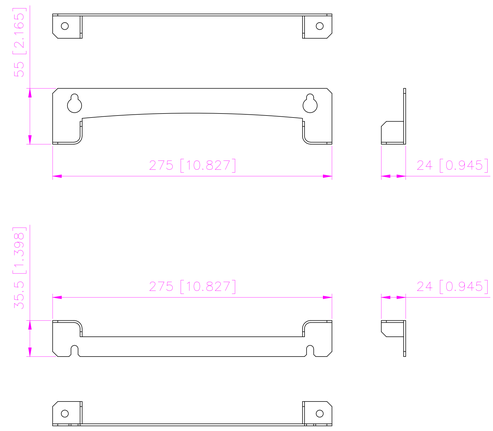


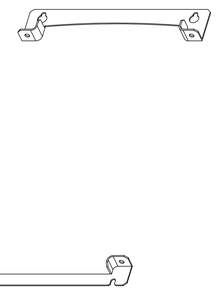

3D View
Flange Option

| | | | | | |
|---|---|---|---|---|---|
| 정 CHANGE 개 | LS IS | | | LSLV-H100 | 매 수 SHEETS |
| | 삼 각 법 3RD ANGLE PROJECTION | 척 도 SCALE / , NS | 단 위 DIMENSION MM | 작 성 일 DATE . . | 도면명칭 TITLE: H100 FLANGE OPTION DRAWING FRAME SIZE D |
| | THIS DOCUMENT AND INFORMATION CONTAINED IN IT ARE CONFIDENTIAL AND CANNOT BE COPIED OR DISCLOSED IN WHOLE OR IN PART WITHOUT PERMISSION | | | | 도면번호 DWG. NO. |
| | | | | | 관련도번 REF. NO. |

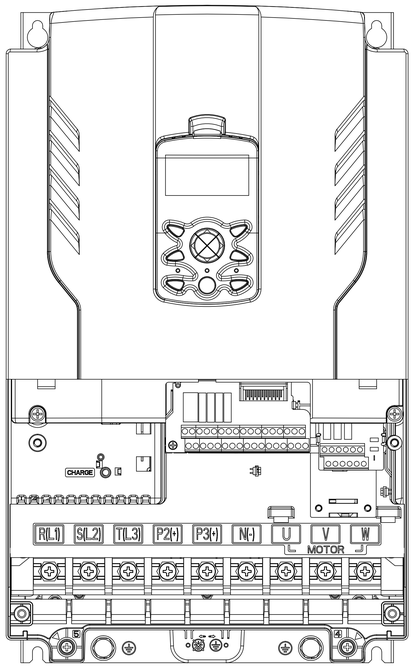


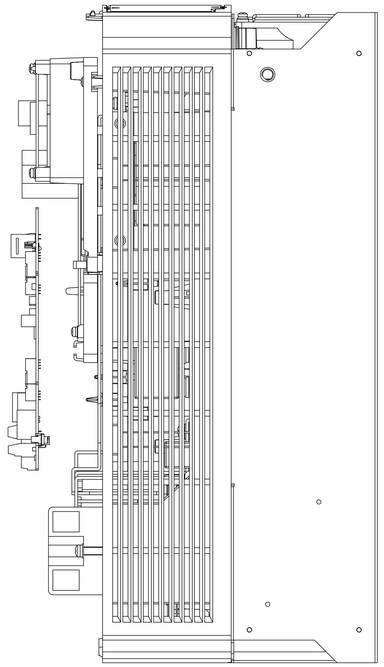

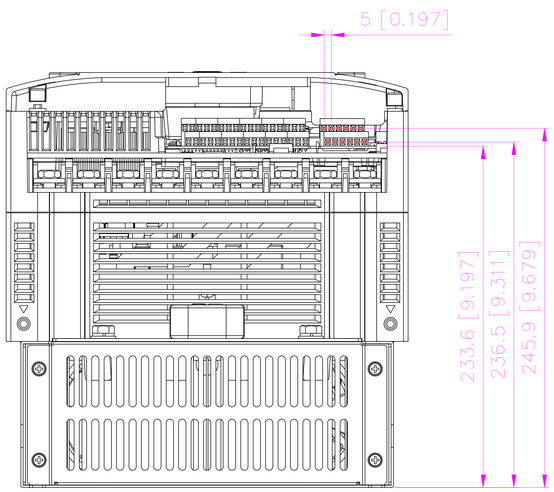


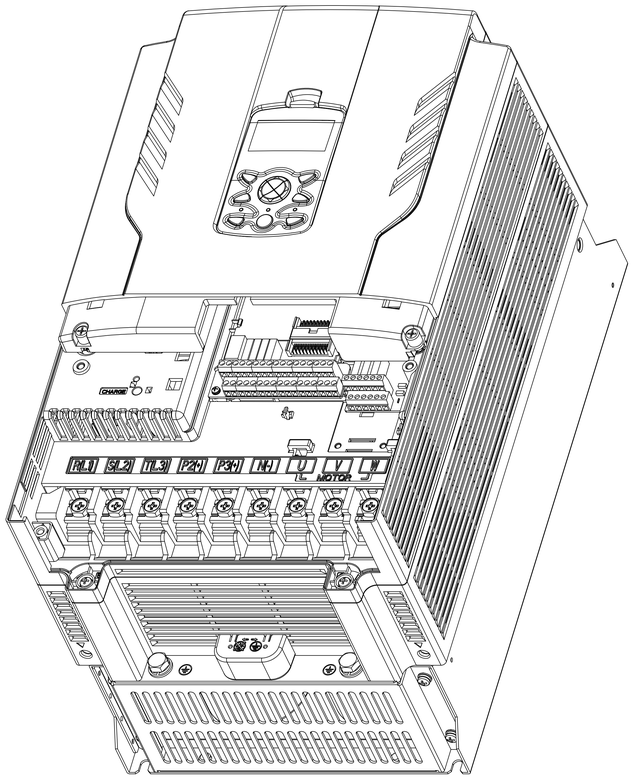


3D View

Drive + Option Module

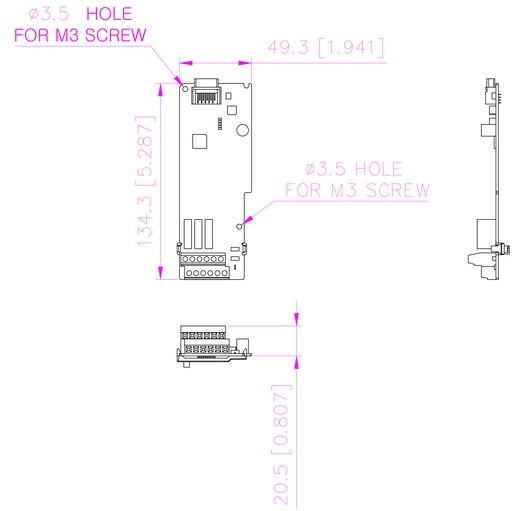


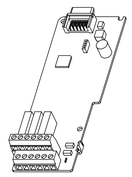

3D View

Option Module
(EXTENSION I/O)

| | | | | | |
|---|---|---|---|---|---|
| 정 CHANGE 개 | LS IS | | | LSLV-H100 | 매 수 SHEETS |
| 삼 각 법 3RD ANGLE PROJECTION | 척 도 SCALE / , NS | 단 위 DIMENSION MM | 작 성 일 DATE . . | 도면명칭 TITLE | H100 OPTION MODULE DRAWING (EXTENSION IO) FRAME SIZE D |
| THIS DOCUMENT AND INFORMATION CONTAINED IN IT ARE CONFIDENTIAL AND CANNOT BE COPIED OR DISCLOSED IN WHOLE OR IN PART WITHOUT PERMISSION | | | | 도면번호 DWG. NO. | |
| | | | | 관련도번 REF. NO. | |

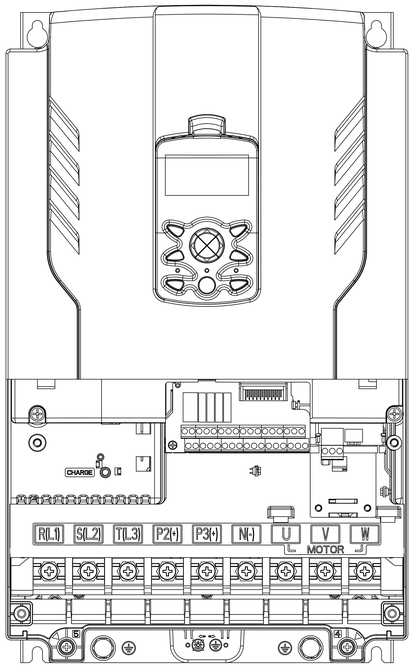


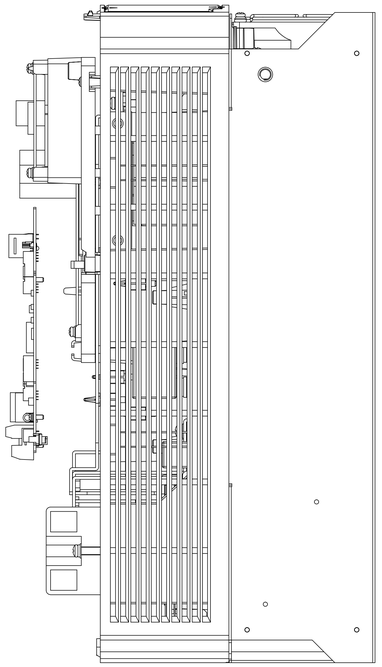

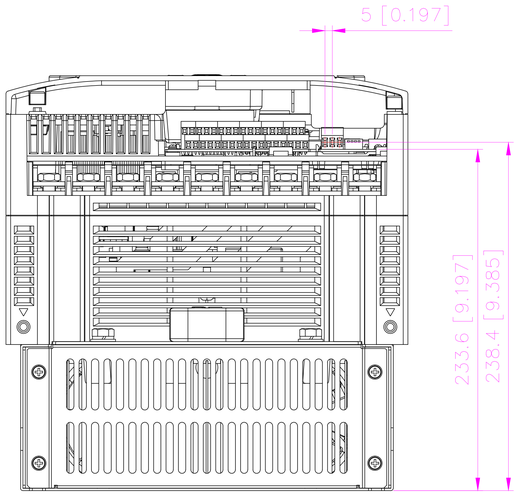


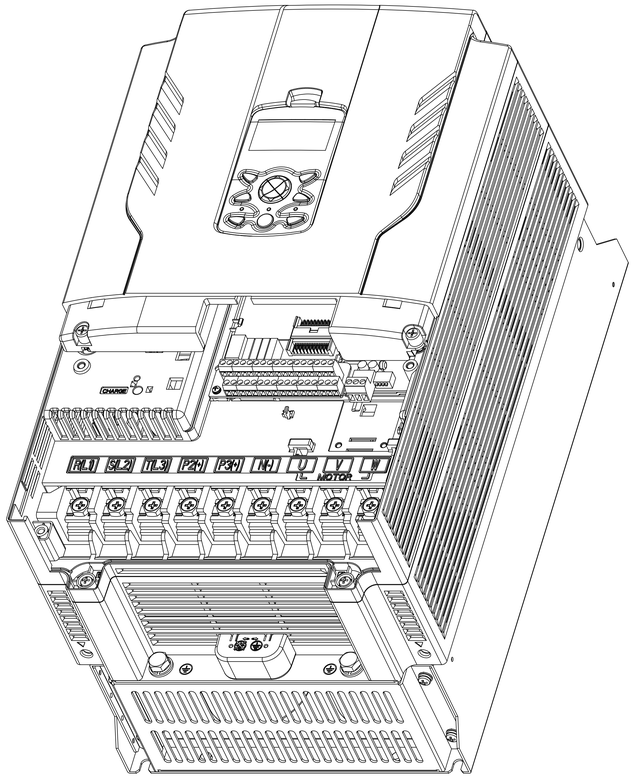


3D View

Drive + Option Module

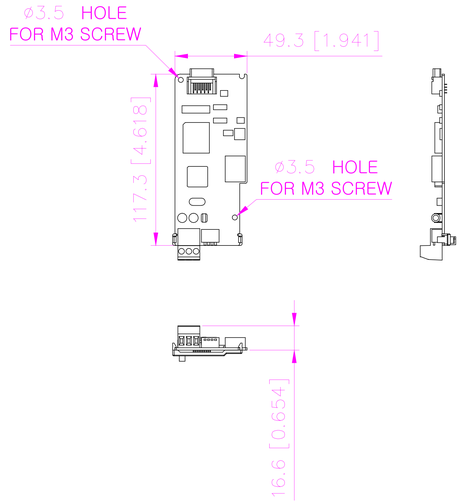


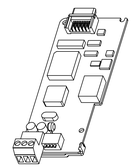

3D View

Option Module
(LONWORK)

| | | | | | | |
|---|---|---|---|---|---|---|
| 정 CHANGE 개 | LS IS | | | | LSLV-H100 | 매 수 SHEETS |
| | 삼 각 법 3RD ANGLE PROJECTION | 척 도 SCALE | 단 위 DIMENSION | 작 성 일 DATE | 도면명칭 TITLE | H100 OPTION MODULE DRAWING (LONWORK) FRAME SIZE D |
| | | / , NS | MM | . . | | |
| | THIS DOCUMENT AND INFORMATION CONTAINED IN IT ARE CONFIDENTIAL AND CANNOT BE COPIED OR DISCLOSED IN WHOLE OR IN PART WITHOUT PERMISSION | | | | 도면번호 DWG. NO. | |
| | | | | | 관련도번 REF. NO. | |

## [ MATCHED H100 DRIVES FOR FRAME SIZE D ]

| Item | Applied Motor | Phase / Voltage | Output Current | Weight | Heat Loss(W) |
|---|---|---|---|---|---|
| 0370H100-4 | ND: 50HP / 37kW | 3ø / 460V | 75A | 57lb / 26kg | 570 |

* HD: Heavy duty type for constant torque load
* ND: Normal duty type for variable torque load
* Heatloss is measured with 60Hz, 100% load and default carrier frequency.
* Refer to product manual for additional details and specifications

## [ TERMINAL SPECIFICATION FOR FRAME SIZE D ]

| Item | Input / Output Terminal Screw Size | Input / Output Screw Torque | Control Circuit Terminal Screw Size | Control Circuit Screw Torque |
|---|---|---|---|---|
| 0370H100-4 | M8 | 61.2 ~ 91.8 Kgf.cm<br>6.2 ~ 9.4 Nm<br>53 ~ 80 lbf.in | M2<br>(P1~P7/CM/VR/V1/I2/AO/Q1/EG/24/TI/TO/SA,SB,SC/S+,S-,SG)<br><br>M2.6 (A1,B1,C1) | M2<br>2.2 ~ 2.5 Kgf.cm<br>0.22 ~ 0.25 Nm<br>1.91 ~ 2.17 lbf.in<br><br>M2.6<br>4.0 Kgf.cm<br>0.4 Nm<br>3.47 lbf.in |


개정 CHANGE

LSIS

LSLV-S100

매수 SHEETS

삼각법 3RD ANGLE PROJECTION | 척도 SCALE / , NS | 단위 DIMENSION MM | 작성일 DATE . .

도면명칭 TITLE: H100 SPECIFICATION FRAME SIZE C

THIS DOCUMENT AND INFORMATION CONTAINED IN IT ARE CONFIDENTIAL AND CANNOT BE COPIED OR DISCLOSED IN WHOLE OR IN PART WITHOUT PERMISSION

도면번호 DWG. NO.

관련도번 REF. NO.