Derwent
Top 100
Global
Innovator
2020

Solution Power

UL/ANSI Medium Voltage Metal Clad Switchgear

c UL us

LS ELECTRIC

UL/ANSI

Medium Voltage Metal Clad Switchgear

Contents

- Key features 04
- UL/ANSI MCSG 09
- Susol VCB & VCB compartment 26
- Devices 41
- Project references 66
- Partnership 67

Solution Power S5/15 UL AR
(1-High)

Solution Power S5/15 UL AR
(2-High)

Solution Power S5/15 UL AR

- Rated voltage : 4.76/15kV
- Rated current : 1200/2000A
- Rated interrupting current : 25/31.5kA
- Accessibility type : Type 2 & 2B
- Arc resistance performance : 31.5kA/0.5sec
- Certification & Standards
  - UL Listed
  - IEEE C37.09, IEEE C37.20.2, IEEE C37.20.7

Solution Power S5/15 UL NAR
(1-High)

Solution Power S5/15 UL NAR
(2-High)

Solution Power S5/15 UL NAR

- Rated voltage : 4.76/15kV
- Rated current : 1200/2000A
- Rated interrupting current : 25/31.5kA
- Certification & Standards
  - UL Listed
  - IEEE C37.09, IEEE C37.20.2

Solution Power S38 ANSI AR

Solution Power S38 ANSI AR

- Rated voltage : 38kV
- Rated current : 1200/2000A
- Rated interrupting current : 31.5/40kA
- Accessibility type : Type 2 & 2A
- Arc resistance performance : 40kA/0.5sec
- Standards
  - ANSI C37.55, IEEE C37.20.2, IEEE C37.20.6, IEEE C37.20.7

Key features

Efficiency & Cost-savings

Compact size

With our compact MCSG, LS enables you to reduce and make efficient use of the floor space. We secure a free space for installation even in the places where safety is top priority such as Power Plant(Nuclear, Thermal, Hydro and Cogeneration), Industrial Plant(semiconductor, petrochemical, steel) and Infrastructure facilities (subways, railways, airports), etc.

- **Reduced installing area up to 43% for 1-High MCSG**
  Conventional switchgear: W36” D82” ➞ LS: W23.6” D72” (Solution Power S5/15 UL AR) [1, 2]
  Conventional switchgear: W36” D82” ➞ LS: W29.5” D65” (Solution Power S5/15 UL NAR)

- **Reduced installing area up to 38% for 2-High MCSG**
  Conventional switchgear: W36” D105” →LS: W23.6” D99” (Solution Power S5/15 UL AR) [1, 2]
  Conventional switchgear: W36” D105” →LS: W29.5” D90” (Solution Power S5/15 UL NAR)

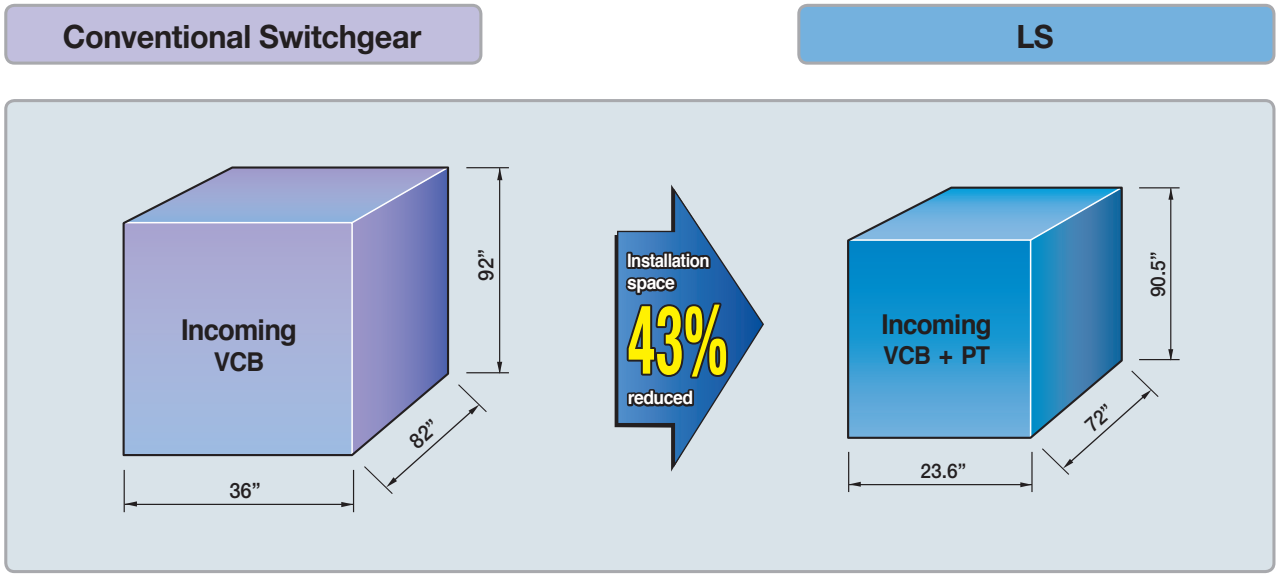

Note) 1. For models 5/15kV 31.5kA 1200A 1-high MCSG panel.
2. In case of bottom incoming and outgoing.

Key features

Safety

Arc resistance design (for AR type MCSG)

LS MCSG is designed to redirect arc energy and prevent damage to peripheral devices as possible in the event of internal arc happening. Its plenum design redirects dangerous arc flash energy away from operating personnel.

- Using the arc-lead plenums & side cover for arc ventilation
- Optimized flap position for arc release
- The top guidance & exhaust for arc pressure & heat

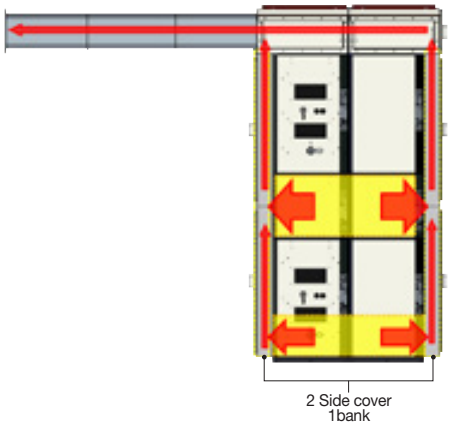

Arc resistant structure of S5/15 UL AR

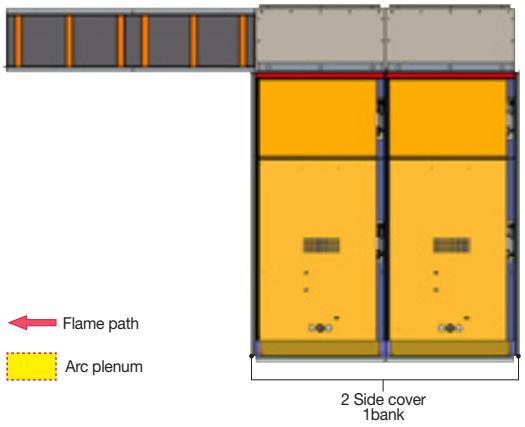

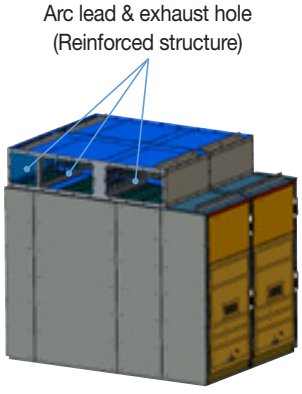

Arc resistant structure of S38 ANSI AR

International certification and various devices

LS provides the best protection rating out of air insulated switchgear. To prove its reliability and safety, LS uses the internationally recognized testing agency, KERI / KEMA / CESI for certification as well as LS' test lab PT&T that is a KOLAS-qualified (Korea Laboratory Accreditation Scheme) accredited testing laboratory and provides worldwide testing service.

- Metal clad type: each compartment is divided by metal partitions for the highest degree of protection rating out of air insulated switchgears.
- Short-circuit, short-time current and internal arc tests passed at IEEE C37.20.7
- Various options including
  - Mechanical interlock to prevent from inadvertent operating
  - Mechanism enable the breaker to be drawn in or out without opening the door
- Solid structure with hinge and locker
- IP Cover on the face of the breaker and inspection window on the door
- Metal shutter and shutter padlock installed in CB compartment for safe maintenance
- Used reliable tube & boots for busbar insulation
- Insulation cap and padlock used for earthing switch to secure insulation and safety
- CT equipped with protective insulation wall

Key features

Convenience

Modular structure

LS MCSG is a modular type and easy stackable for quick assembly.

- Module assembly structure
- Interchangeable VCB & PT compartment

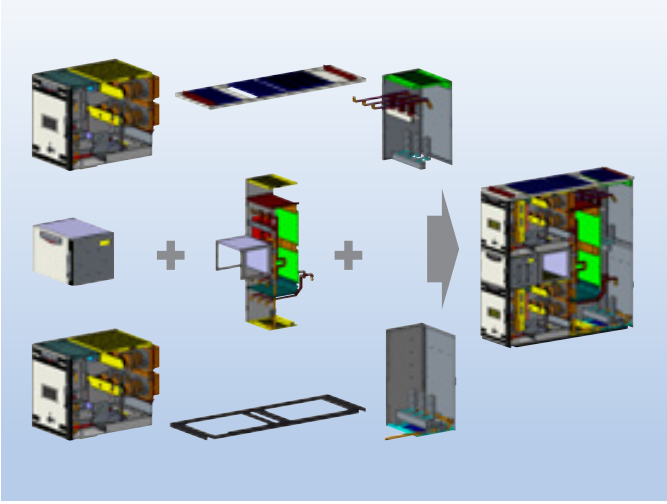

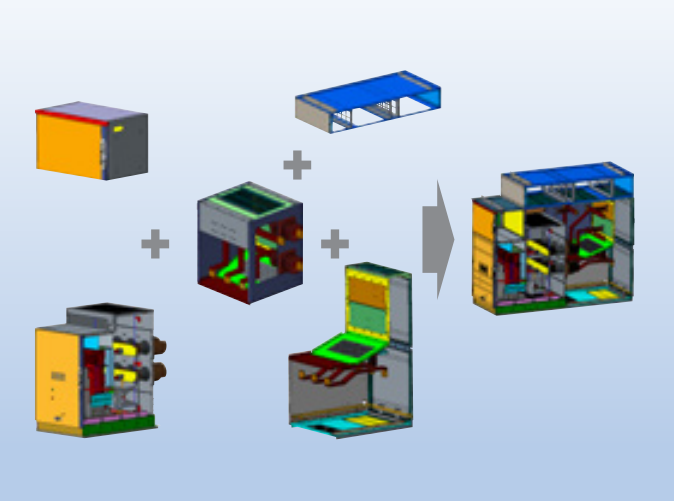

Time saving design for maintenance and inspection

- **Real front accessible CT**

  Full front accessibility for cable connections and current transformers (CT);
  this design feature ensures ease of maintenance, minimal usage of floor space and creates a safe environment.

- **Front & rear viewing windows**

  Located on the front and rear of the assembly, these viewing casements allow complete access to viewing of the bus bar compartment for maintenance to assess any signs of overheating of the bus.

- **Infrared (IR) viewing ports (Optional)**

  Front and rear infrared viewing ports allow maintenance personnel to easily access thermal monitoring of the equipment without having to open the enclosure. IR technology ensures the operators safety while assessing the equipment's internal components for possible overheating.

Key features

Flexibility

Extensible design

LS compact MCSG can satisfy any configuration the customer wants.

S5/15 UL AR
1-High MCSG

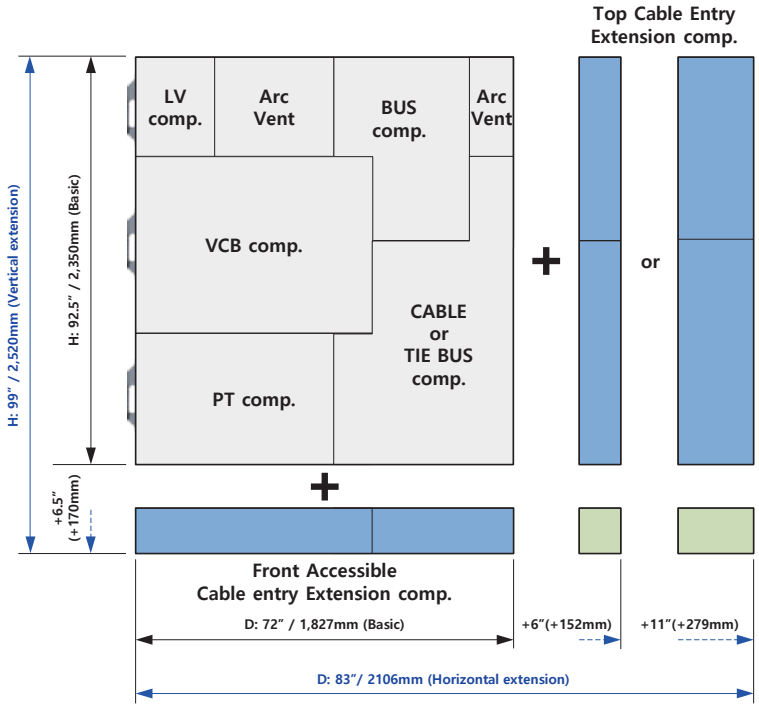

S5/15 UL AR
2-High MCSG

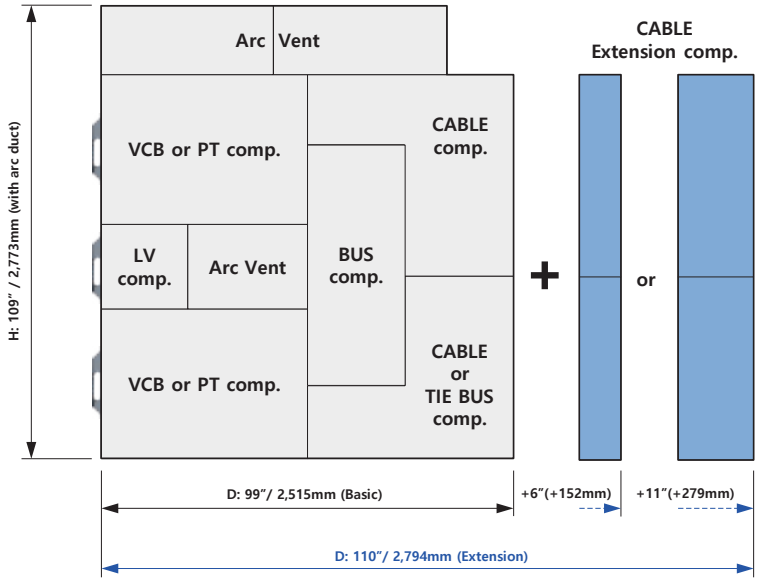

Key features

Flexibility

S5/15 UL NAR
1-High MCSG

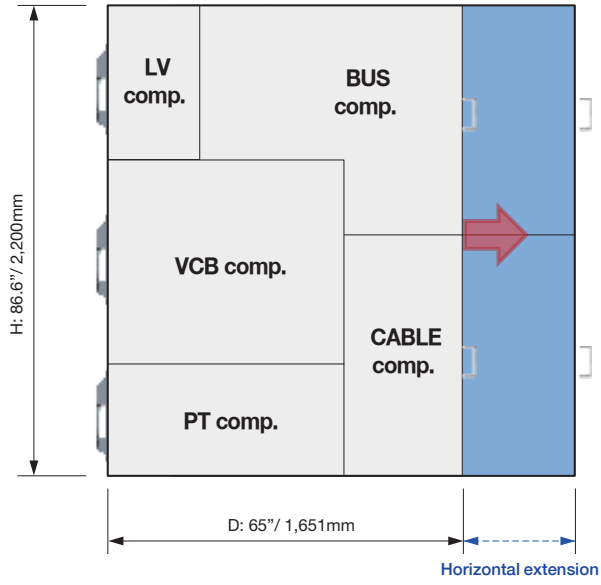

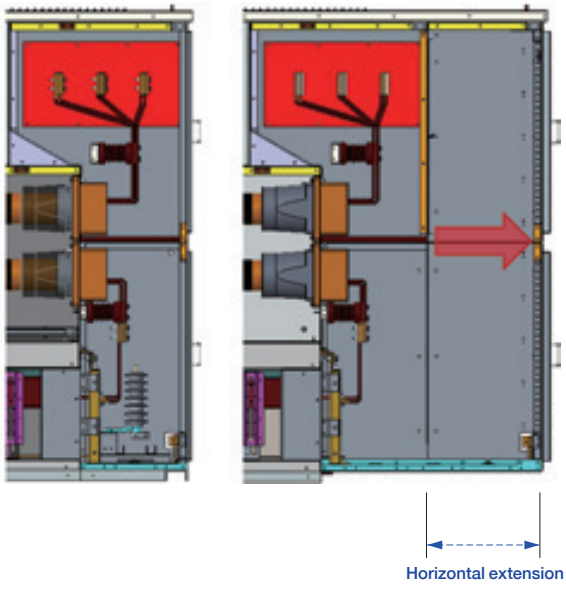

S5/15 UL NAR
2-High MCSG

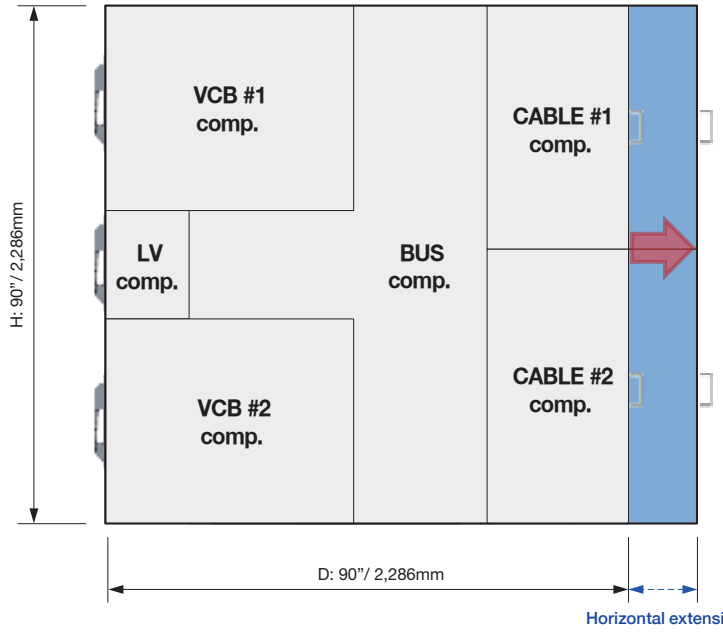

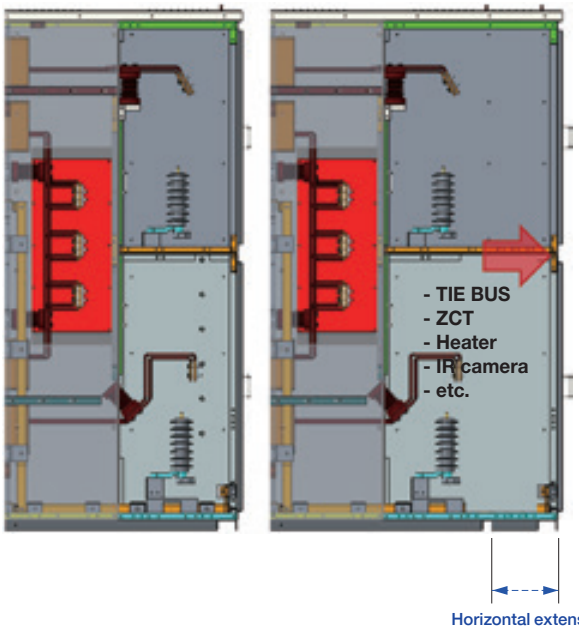

UL/ANSI MCSG
Applications

Building

- Commercial buildings
- Critical power (Data center)

Industry

- Oil & Gas industry
- Petroleum industry
- Chemical industry
- Iron & Steel industry
- Automobile industry
- Cement industry
- Mining industry
- Manufacturing industry

Utility/Public

- Power plants
- Transforming/switching substations

UL/ANSI MCSG
Solution Power S5/15 UL AR

1-High MCSG

Compact

- Installation area reduced by 43% in the electrical room
  - LS 1-High MCSG with arc resistance system: W23.6” D72”
  - Typical 1-High MCSG with arc resistance system: W36” D82”

Structure of real front accessible CT

- CT + CT bushing (Integrated assembly structure)

Structure of arc resistance

- Total 4ea arc flip

Modular design for easy assembly

Ratings

Type	UM1-05A□A12	UM1-15A□A12	UM1-05A□B12	UM1-15A□B12	UM1-05A□B20	UM1-15A□B20
Rated voltage, Ur(kV)	4.76	15	4.76	15	4.76	15
Rated current, Ir(A)	1200	1200	1200	1200	2000	2000
Phase distance, inch(mm)	5.9(150)	5.9(150)	8.3(210)	8.3(210)	8.3(210)	8.3(210)
Rated frequency, fr(Hz)	60					
Rated interrupting current, Ik(kA)	25, 31.5					
Rated short time current, Ik/tk(kA)/sec	25, 31.5 / 2					
Momentary current, Ip(kA)	65, 82					
Rated interrupting time, Cycle	3					
AC withstand voltage, Ud(kV)/1min	36 / 1min					
Impulse withstand voltage, Up(kV, 1.2x50us)	60, 95					
Arc resistance performance, kA/sec	31.5 / 0.5					
Size (W×H×D), inch(mm)	23.6×92.5×72~84* (600×2,350×1,827~2,131.4*) * Back side extended type (length 20”)		29.5×92.5×72~84* (750×2,350×1,827~2,131.4*) * Back side extended type (length 20”)			
Applicable standard	IEEE Std C37.09, IEEE Std C37.20.2, ANSI C37.54, ANSI C37.55					

Structures

Front view

Side view

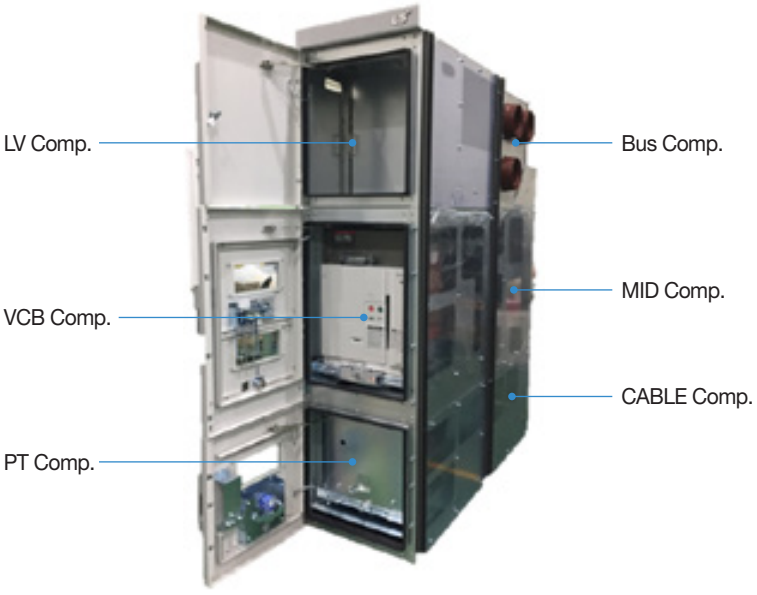

Configuration

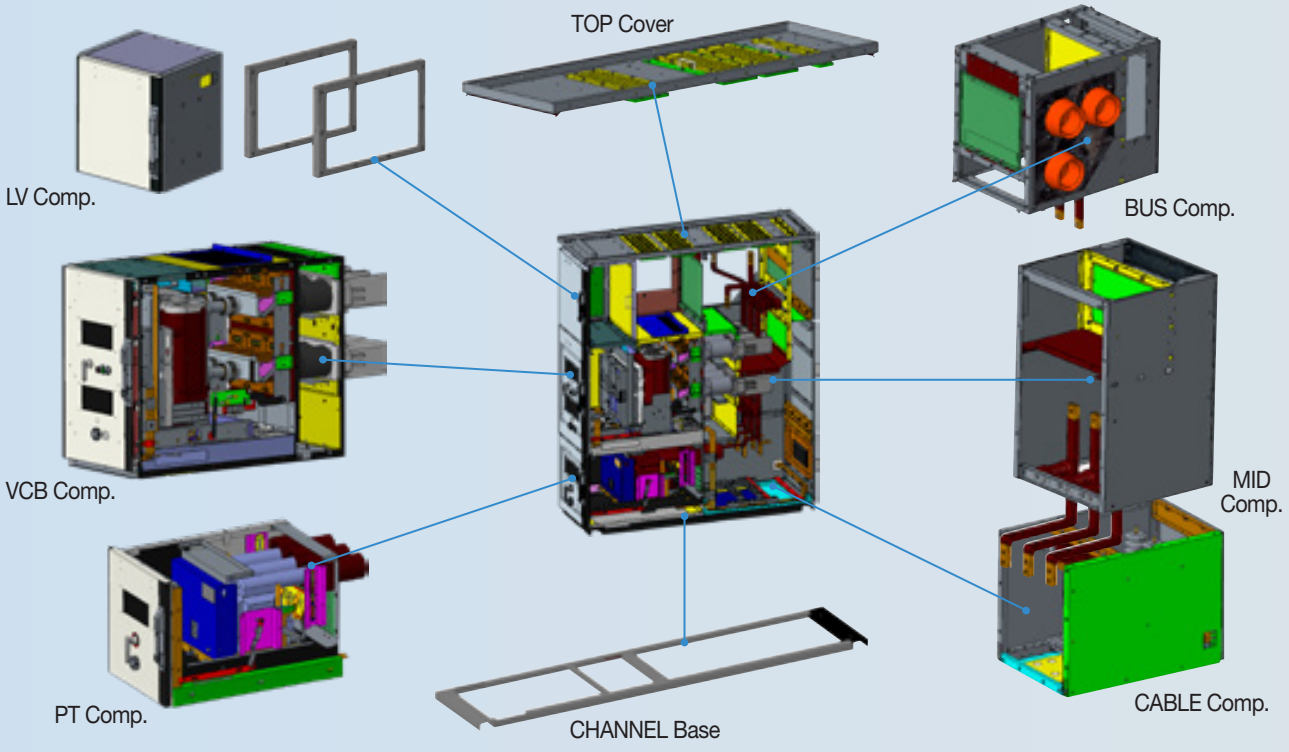

UL/ANSI MCSG
Solution Power S5/15 UL AR

2-High MCSG

Compact

- Installation area reduced by 38% in the electrical room
  - LS 2-High MCSG with arc resistance system: W23.6” D99”
  - Typical 2-High MCSG with arc resistance system: W36” D105”

Structure of real front accessible CT

- Minimizes the time required for inspection, repair and maintenance of CT/CT Bushing

Structure of arc resistance

- Total 7ea arc flip
- Side cover, 5.9”wide

Modular design for easy assembly

Ratings

Type	UM2-05A□A12	UM2-15A□A12	UM2-05A□B12	UM2-15A□B12	UM2-05A□B20	UM2-15A□B20
Rated voltage, Ur(kV)	4.76	15	4.76	15	4.76	15
Rated current, Ir(A)	1200	1200	1200	1200	2000	2000
Phase distance, inch(mm)	5.9(150)	5.9(150)	8.3(210)	8.3(210)	8.3(210)	8.3(210)
Rated frequency, fr(Hz)	60					
Rated interrupting current, Ik(kA)	25, 31.5					
Rated short time current, Ik/tk(kA)/sec	25, 31.5 / 2					
Momentary current, Ip(kA)	65, 82					
Rated interrupting time, Cycle	3					
AC withstand voltage, Ud(kV)/1min	36 / 1min					
Impulse withstand voltage, Up(kV, 1.2x50us)	60, 95					
Arc resistance performance, kA/sec	31.5 / 0.5					
Size (W×H×D), inch(mm)	23.6×113.5*×99~111** (600×2,882*×2,515~2,819.4**) * With arc duct (height 14.1”) ** Back side extended type (length 20”)		29.5×113.5*×99~111** (750×2,882*×2,515~2,819.4**) * With arc duct (height 14.1”) ** Back side extended type (length 20”)			
Applicable standard	IEEE Std C37.09, IEEE Std C37.20.2, ANSI C37.54, ANSI C37.55					

Structures

Front view

Side view

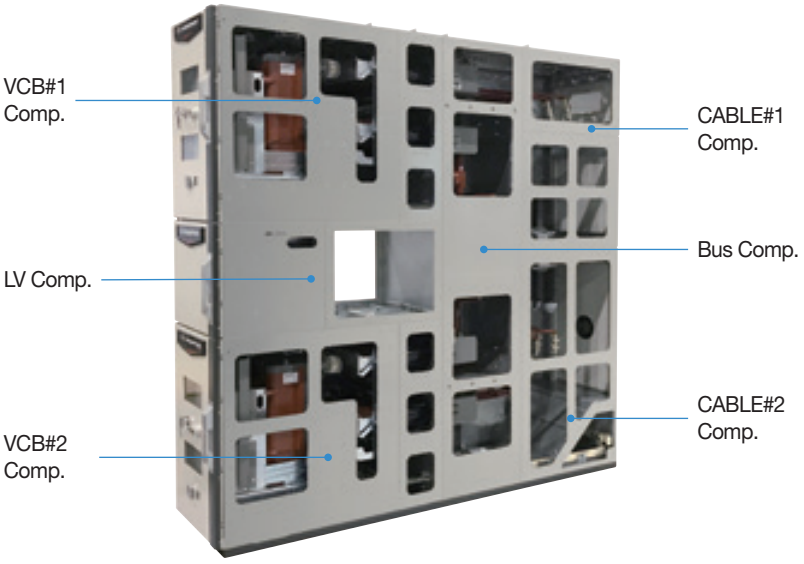

Configuration

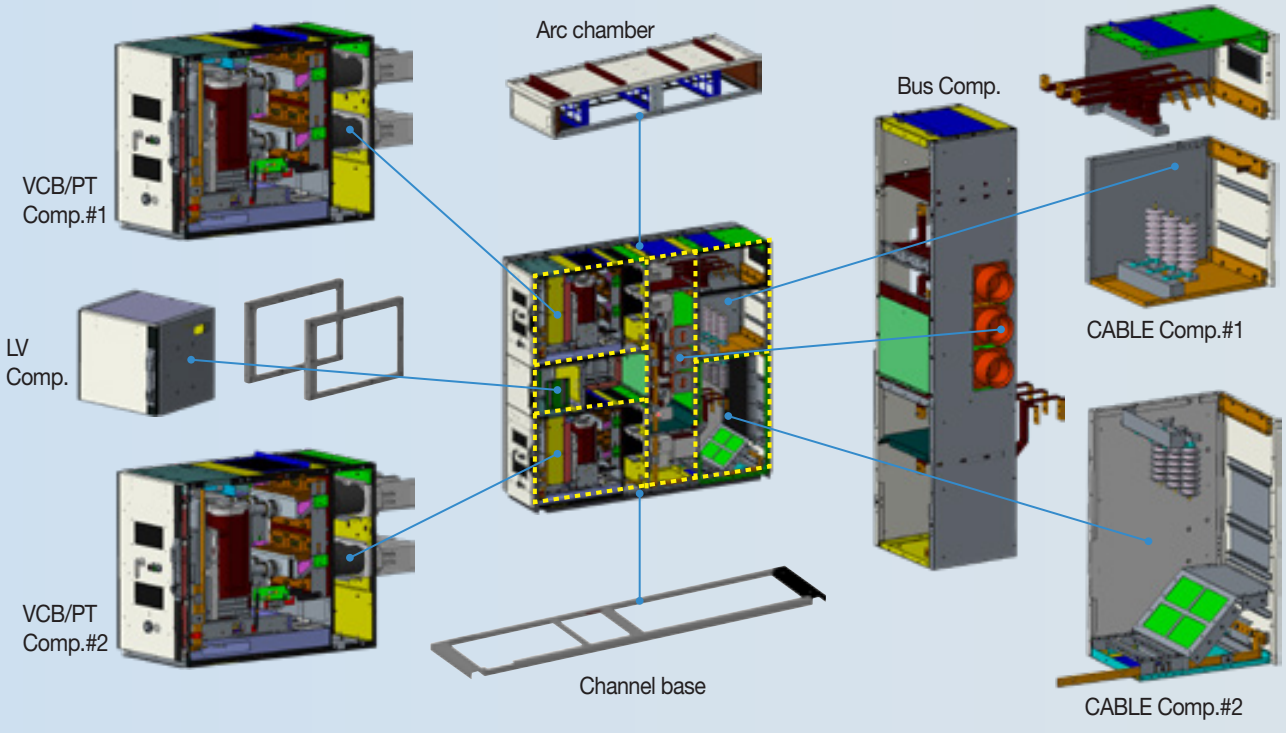

UL/ANSI MCSG
Solution Power S5/15 UL NAR

1-High MCSG

Compact

- Installation area reduced by 35% in the electrical room
  - LS 1-High MCSG without arc resistance system: W29.5” D65”
  - Typical 1-High MCSG with arc resistance system: W36” D82”

Structure of real front accessible CT

- Easy assembly and wiring
- Minimized time for inspection, repair and maintenance

Modular structure

- Easy and fast assembly

Ratings

Type	UM1-05N□B12	UM1-05N□B20	UM1-15N□B12	UM1-15N□B20
SWGR Configuration, 11 type	Basic 4 type, Common 7 type			
Rated voltage, Ur(kV)	4.76	4.76	15	15
Rated current, Ir(A)	1200	2000	1200	2000
Phase distance, inch(mm)	210	210	210	210
Rated frequency, fr(Hz)	60			
Rated interrupting current, Ik(kA)	25, 31.5			
Rated short time current, Ik/tk(kA)/sec	25, 31.5 / 2			
Momentary current, Ip(kA)	65, 82			
Rated interrupting time, Cycle	3			
AC withstand voltage, Ud(kV)/1min	36 / 1min			
Impulse withstand voltage, Up(kV, 1.2x50us)	60, 95			
Size (W×H×D), inch(mm)	29.5×86.6×65 (750×2,200×1,651)			
Applicable standard	IEEE Std C37.09, IEEE Std C37.20.2, ANSI C37.54, ANSI C37.55			

Structures

[Unit: inch(mm)]

Front view

Side view

Configuration

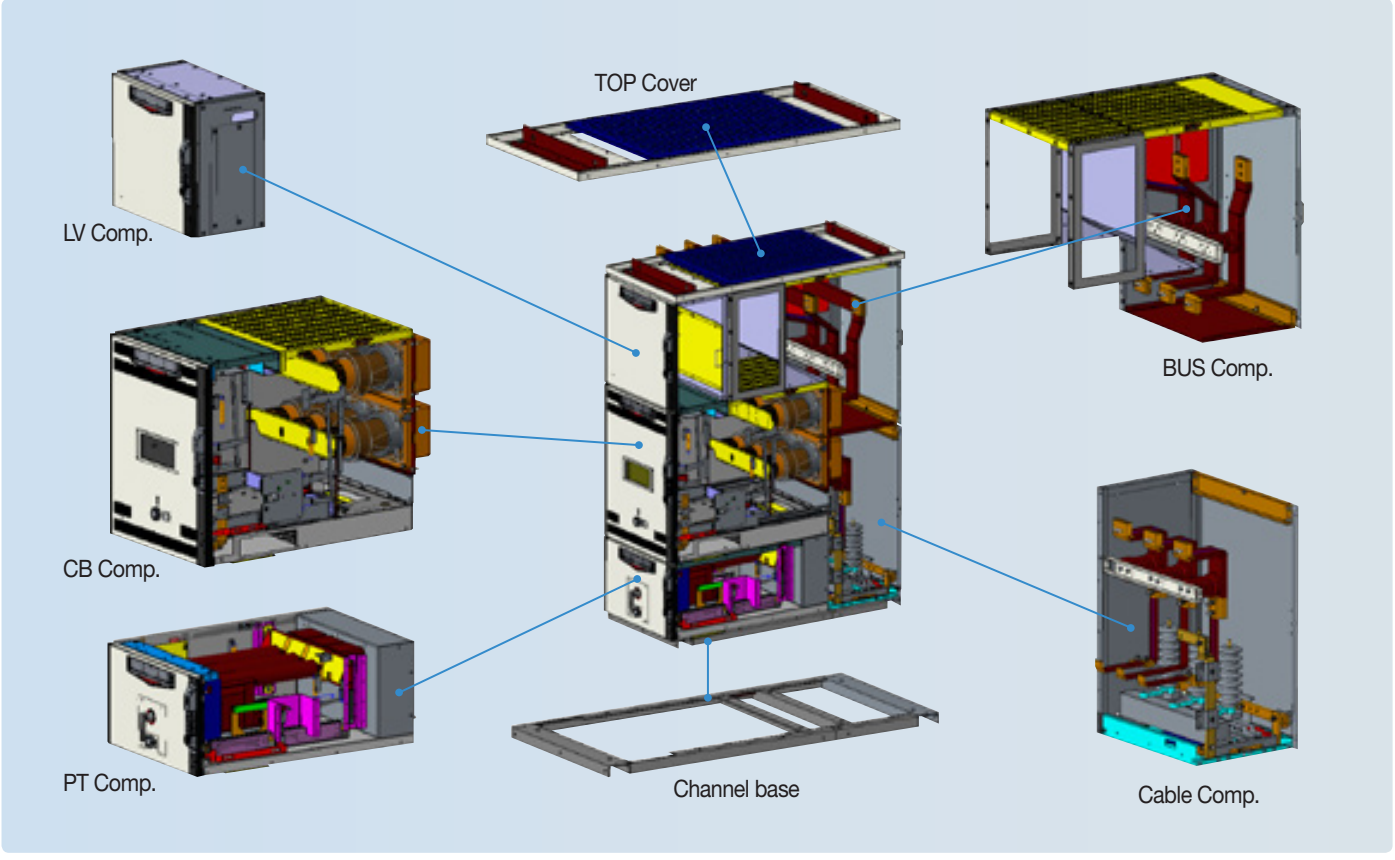

UL/ANSI MCSG
Solution Power S5/15 UL NAR

2-High MCSG

Compact

- Installation area reduced by 30% in the electrical room
  - LS 2-High MCSG without arc resistance system: W29.5” D90”
  - Typical 2-High MCSG with arc resistance system: W36” D105”

Structure of real front accessible CT

- Easy assembly and wiring
- Minimized time for inspection, repair and maintenance

Modular structure

- Easy and fast assembly

Ratings

Type	UM2-05N□B12	UM2-05N□B20	UM2-15N□B12	UM2-15N□B20
SWGR Configuration, 22 type	Basic 22 Type, Common 2 Type			
Rated voltage, Ur(kV)	4.76	4.76	15	15
Rated current, Ir(A)	1200	2000	1200	2000
Phase distance, inch(mm)	210	210	210	210
Rated frequency, fr(Hz)	60			
Rated interrupting current, Ik(kA)	25, 31.5			
Rated short time current, Ik/tk(kA)/sec	25, 31.5 / 2			
Momentary current, Ip(kA)	65, 82			
Rated interrupting time, Cycle	3			
AC withstand voltage, Ud(kV)/1min	36 / 1min			
Impulse withstand voltage, Up(kV, 1.2x50us)	60, 95			
Size (W×H×D), inch(mm)	29.5×90×90 (750×2,286×2,286)			
Applicable standard	IEEE Std C37.09, IEEE Std C37.20.2, ANSI C37.54, ANSI C37.55			

Structures

[Unit: inch(mm)]

Front view

Side view

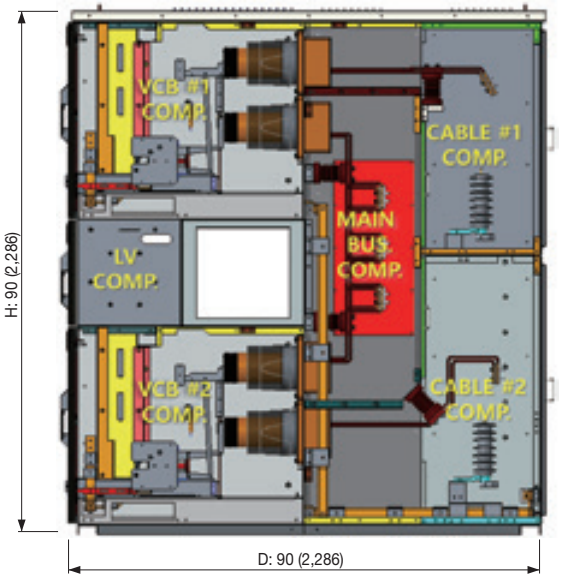

Configuration

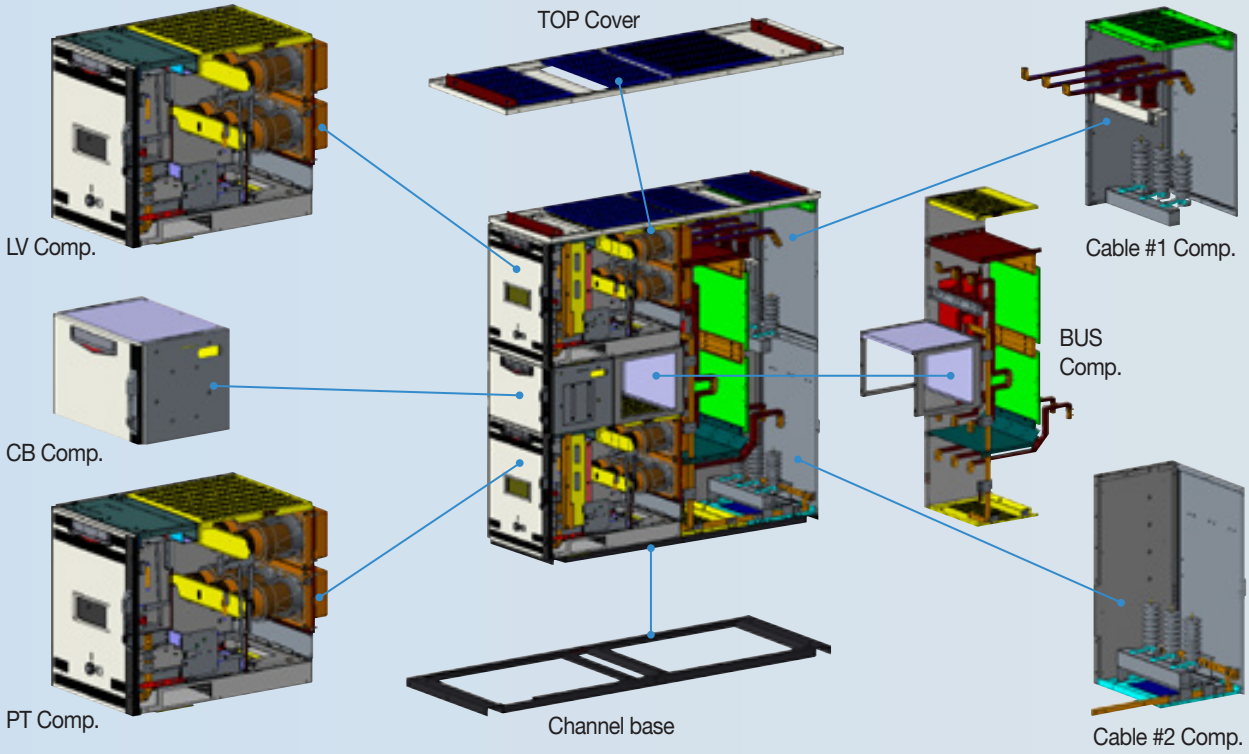

UL/ANSI MCSG
Solution Power S38 ANSI AR

Compact
- 2-stack VTs in one section

Structure of real front accessible CT
- Easy assembly and wiring
- Minimized time for inspection, repair and maintenance

Optimized arc resistance structure
- Total 5ea arc relief flip
- Arc resistance side cover
- Pressure & heat exhaust structure

Modular structure
- Easy and fast assembly

Ratings

Type	UM1-38A32D12	UM1-38A32D20	UM1-38A40D12	UM1-38A40D20
Rated voltage, Ur(kV)	38	38	38	38
Rated current, Ir(A)	1200	2000	1200	2000
Phase distance, inch(mm)	300			
Rated frequency, fr(Hz)	60			
Rated interrupting current, Ik(kA)	31.5		40	
Rated short time current, Ik/tk(kA)/sec	31.5 / 2		40 / 2	
Momentary current, Ip(kA)	82		104	
Rated interrupting time, Cycle	3		3	
AC withstand voltage, Ud(kV)/1min	80		80	
Impulse withstand voltage, Up(kV, 1.2x50us)	150		150	
Arc resistance performance, kA/sec	31.5 / 0.5		40 / 0.5	
Size (W×H×D), inch(mm)	42×86.6~108.3×118; Arc duct Height : 19.7 (1,066×2,250~2,750×3000; Arc duct Height : 500)			
Applicable standard	ANSI C37.55, IEEE C37.20.2, IEEE C37.20.6, IEEE C37.20.7 (designed and tested to comply with ANSI and IEEE standards)			

Structures

[Unit: inch(mm)]

Front view

Side view

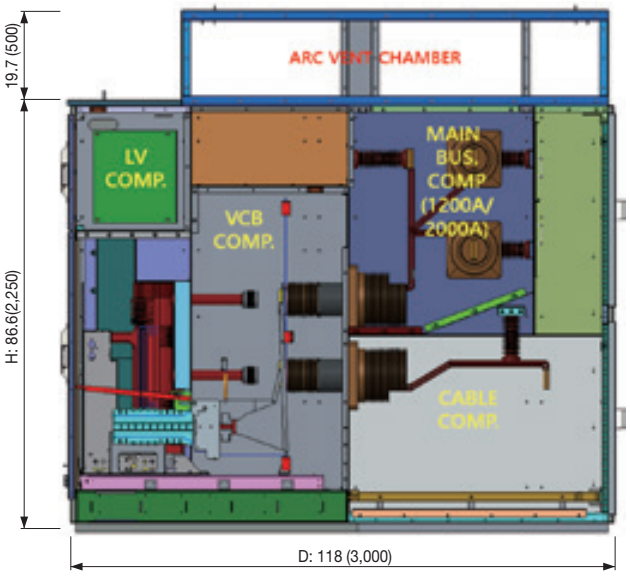

Configuration

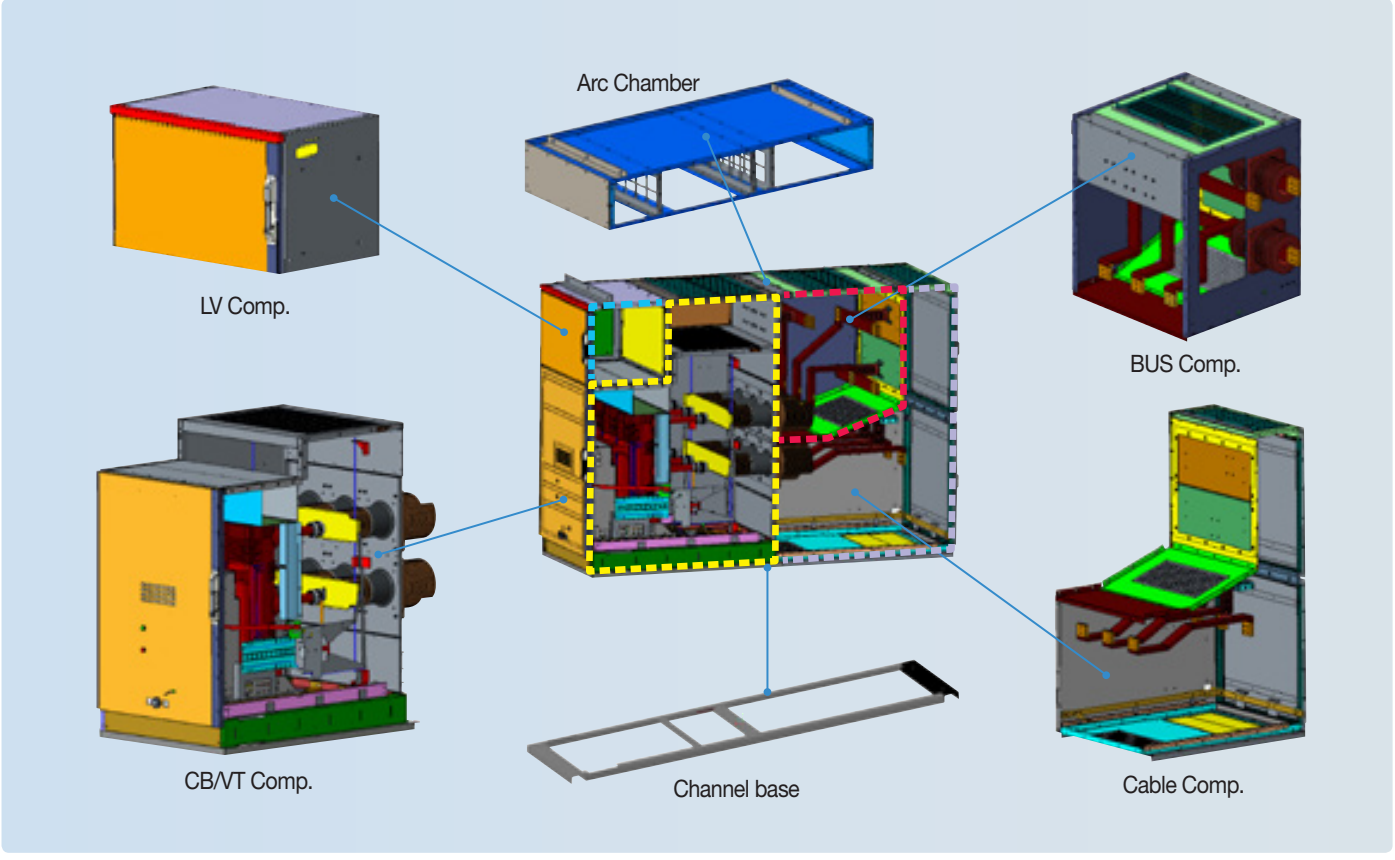

UL/ANSI MCSG
Solution Power S38 ANSI NAR

Compact
- 2-stack VTs in one section

Structure of real front accessible CT
- Easy assembly and wiring
- Minimized time for inspection, repair and maintenance

Modular structure
- Easy and fast assembly

Ratings

Type	UM1-38A32D12	UM1-38A32D20	UM1-38A40D12	UM1-38A40D20
Rated voltage, Ur(kV)	38	38	38	38
Rated current, Ir(A)	1200	2000	1200	2000
Phase distance, inch(mm)	300			
Rated frequency, fr(Hz)	60			
Rated interrupting current, Ik(kA)	31.5		40	
Rated short time current, Ik/tk(kA)/sec	31.5 / 2		40 / 2	
Momentary current, Ip(kA)	82		104	
Rated interrupting time, Cycle	3		3	
AC withstand voltage, Ud(kV)/1min	80		80	
Impulse withstand voltage, Up(kV, 1.2x50us)	150		150	
Size (W×H×D), inch(mm)	42×86.6×118 (1,066×2,250×3,000)			
Applicable standard	ANSI C37.55, IEEE C37.20.2, IEEE C37.20.6 (designed and tested to comply with ANSI and IEEE standards)			

Structures

[Unit: inch(mm)]

Front view

Side view

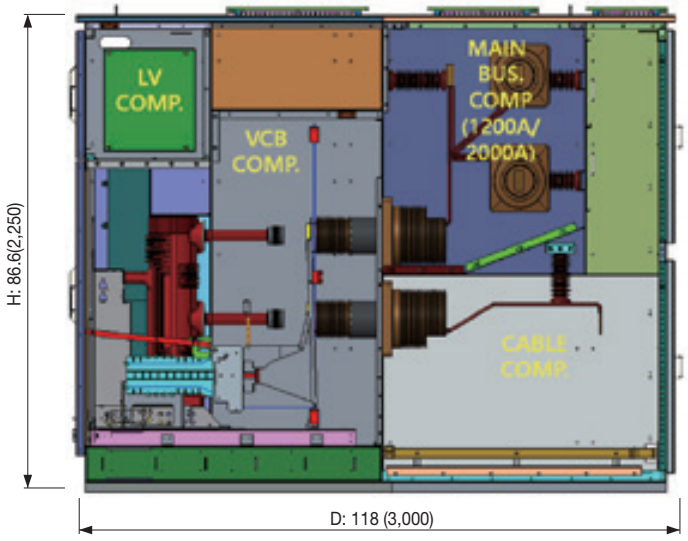

Configuration

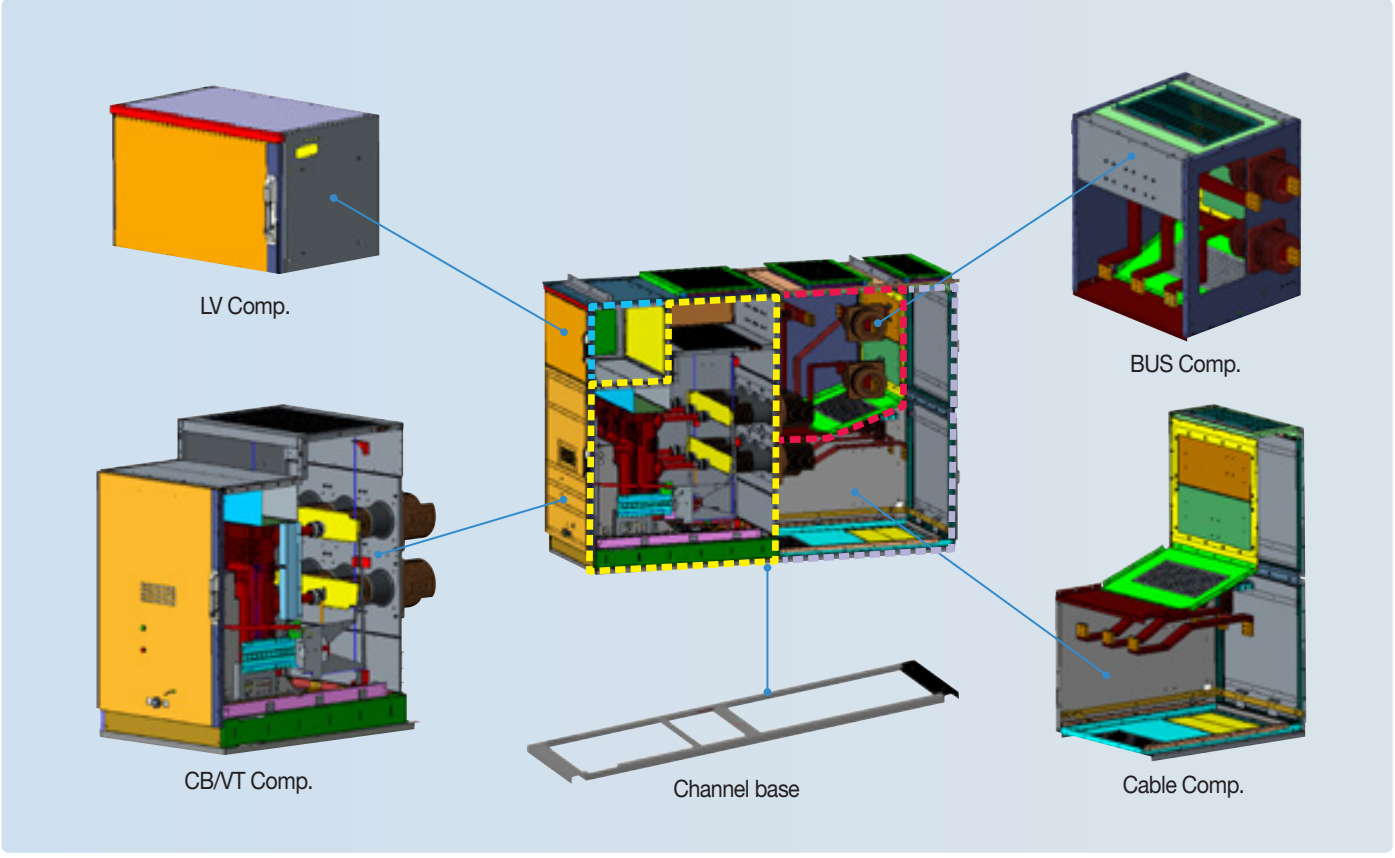

Outdoor Enclosures

Dimension

[Unit: inch(mm)]

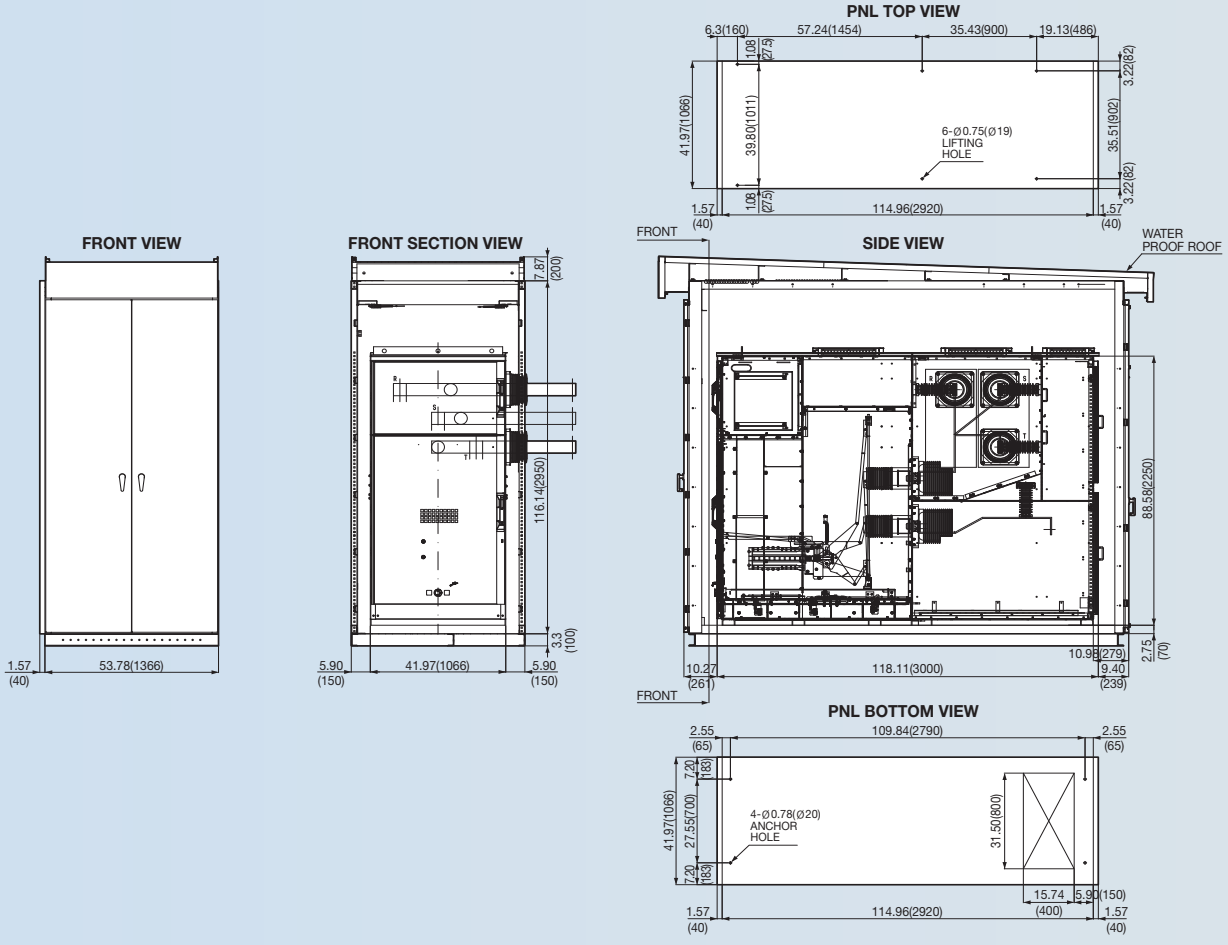

UL/ANSI MCSG
Designation

UM	2	—	15	A	32	B	12

UL/ANSI MCSG

High (Stack) Note1)	
1	1High
2	2High

Voltage	
05	4.76kV
15	15kV
38	38kV

Arc resist.	
A	Arc Resistance Gear
N	Non-Arc Resistance Gear

S.C STC Note2)	
25	25kA
32	31.5kA
40	40kA

Size (wide) Note3)	
A	23.6” (600mm)
B	29.5” (750mm)
D	42” (1,066mm)

Current	
12	1200A
20	2000A

Note)
1. 2High is not applicable for 38kV.
2. 25/31.5kA can be selected for 4.76/15kV.
   31.5/40kA can be selected for 38kV.
3. Both 23.6” and 29.5” are available for 4.76/15kV 25/31.5kA 1200A AR Gear.
   Only 29.5” is available for 4.76/15kV 25/31.5kA 2000A AR gear and 4.76/15kV 25/31.5kA 1200/2000 Non-AR gear.
   Only 42” is available for 38kV 31.5/40kA 1200/2000A AR and Non-AR gear.

UL/ANSI MCSG
Compartment

Low Voltage Compartment

- Enough space to test and change the internal wiring easily.
- Wiring duct for panel connection at the top is made of steel.

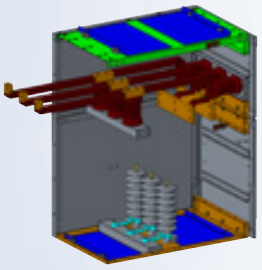

Cable compartment

- Sufficient space for wiring
- Insulation cap for the dielectric of Earthing switch
- Bottom incoming and outgoing (Top incoming and outgoing not available)

CB Compartment

- C.B. can be drawn in and out without opening the door.
- Viewing window for C.B. inspection
- Solid structure with hinge and locker
- Metal shutter and shutter padlock
- IP cover on the face of C.B

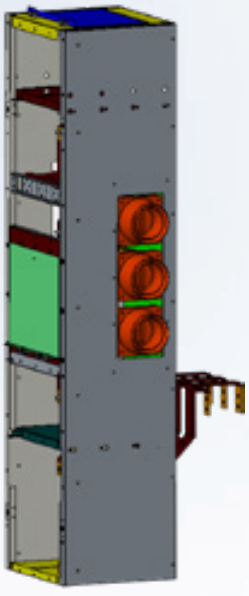

Bus Compartment

- Independent bus compartment structured not to affect any accident to adjacent panels .

Shutter Padlock

The hole to lock the shutters (load and line side) in close position, to increase the safety during the maintenance of a VCB draw-out position.

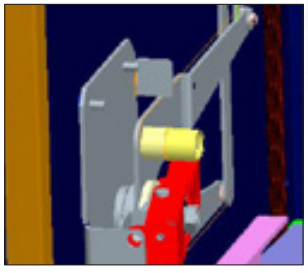

Inspection window

Viewing window permits view of the status of the breaker through the closed door.

Emergency trip device

C.B. can be tripped by trip device without opening the door.

Mechanical position indicator

Indicate the service and test position of C.B.

Draw-in and out device

C.B. can be drawn-in and out with the door closed.

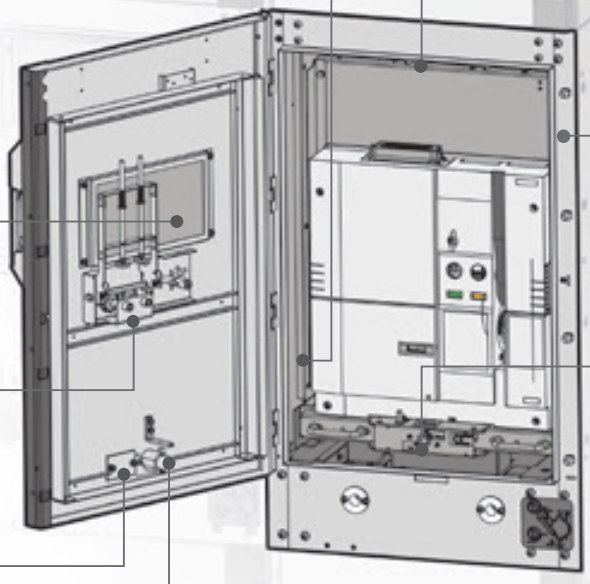

Plug-in Interlock

This device prevents the circuit breaker from separating from the Jack Terminal when in the Run position

Interlocking device between door and C.B.

When the C.B. is in service position, customer can not open the door without releasing the interlock key.

Truck 3-Position Withdraw Structure

Truck 3-Position Withdraw Structure was reviewed for ANSI Standard about Susol VCB (LS VCB).

Susol VCB

Vacuum Circuit Breaker, VCB is installed in the medium voltage distribution lines to protect life and load equipment. In case of accidents such as over current, short circuit and ground fault current, VCB works by interrupting the circuit through the inner Vacuum Interrupter which is acted by signal from the outside separate relay.

Susol VCB responds.

- customer needs for the breakers with high interrupting capacity and large current due to the integration and increase of the load capacity.
- worldwide trend of diversification in the medium voltage distribution lines.
- increase of the reliability for the temperature characteristics of circuit breakers.

Premium-type products to improve convenience and reliability of medium voltage switchgear configuration.

- full line-up modeling to the high interrupting capacity and large current.
- main structure with high reliability application.
- a variety of accessories and ability to maximize.

Suitable for use as the main circuit breaker to protect key installations in the places such as device industry, power plants, high-rise buildings, large ships.

▶ Strengthening of the high interrupting capacity and large current models and full line-up new VCB models to high/middle/low.

Voltage	Interrupting current	Rated current
05/15kV	25/31.5/40/50kA	1200/2000/3000A
27kV	25kA	1200A
38kV	31.5/40kA	1200/2000A

▶ Main circuit structure with high reliability.

- Maximizing the durability and reliability of the main circuit contactors (Stego Tulip contactor).
- Strong structure for the temperature rise (Natural cooling system).

▶ Convenience of switchgear configuration and a variety of accessories.

- CB compartment structure: Metal isolation structures to prevent the accident spread and ensure safety. And the convenience of switchgear building is extended by its module style.
- A variety of accessories: UVT, Locking Magnet, Plug Interlock, Key lock, Temperature Sensor, MOC, TOC, Earthing S/W.
- Maximizing compatibility with existing products through the dualistic deployment of phases and compact models.

※ Type testing is complete for all models according to latest standard,
IEEE Std C37.09, IEEE Std C37.20.2, ANSI C37.54, ANSI C37.55, UL (CSA)

Main circuit structure with high reliability

Susol VCB

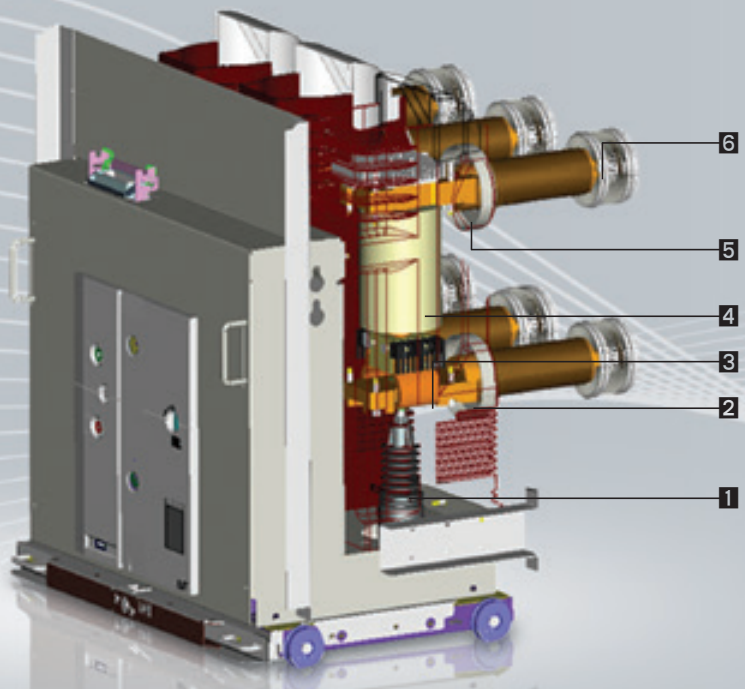

Breaker

1 Insulation rod
2 Lower terminal
3 Shunt
4 Vacuum interrupter
5 Upper terminal
6 Tulip contactor

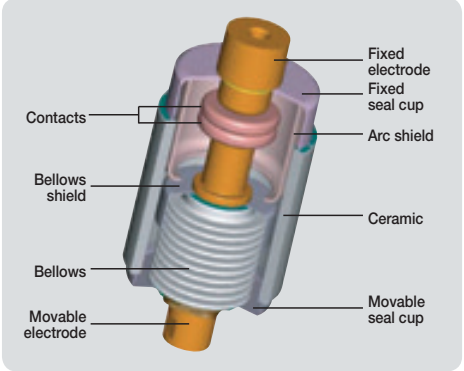

Vacuum Interrupter, VI

The vacuum rate within the VI is very high (approximately $5x10^{-5}$ Torr) and the spacing between fixed contact and movable contact is about 6~20mm, depending on the voltage.

The contacts are in a structure that arc can easily be extinguished and the surfaces of the contacts are made of special alloy (copper-chromium) and the interior is completely sealed to prevent loss of vacuum.

Therefore the wearing of the contacts can be minimized in the event of short-circuit and the arc energy by overvoltage or switching can be reduced effectively.

Convenience and Variety

- Maximizing the durability and reliability of the main circuit contactors (Stego Tulip contactor)
- Strong structure for the temperature rise (Natural cooling system)

Stego Tulip

Main circuit structure with high reliability

- Maximizing the durability and reliability of the main circuit contactors (Stego Tulip contactor)
- Strong structure for the temperature rise (Natural cooling system)

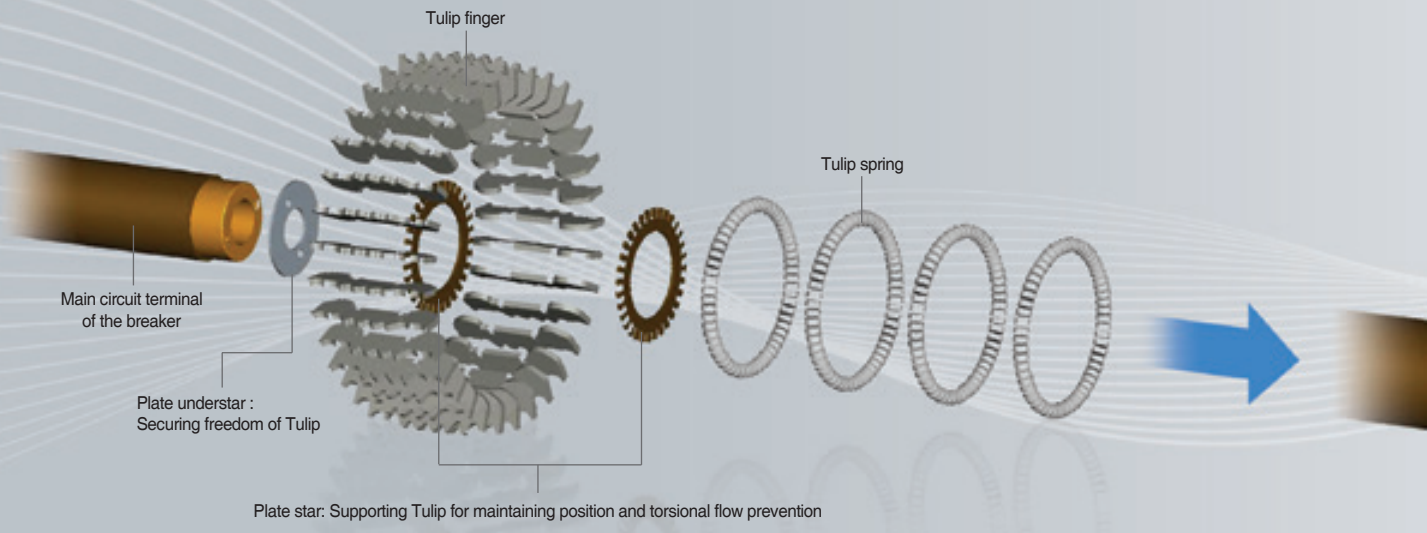

Structure of Stego Tulip Terminal

- Maintaining the connection between breaker and cradle for the optimum current path through securing freedom of Tulip.
- Increasing the heat dissipation area of the contactors and minimizing aging.

4.76/15/27/38kV ...

(UVL-05/15/27, VH-05/15, UVH-38)

- Drawout / natural cooling system
- Improved temperature characteristics and ensured high reliability

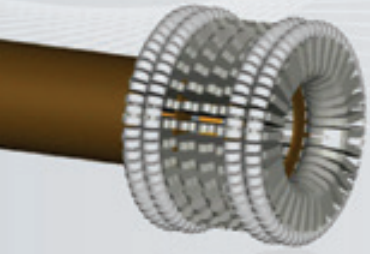

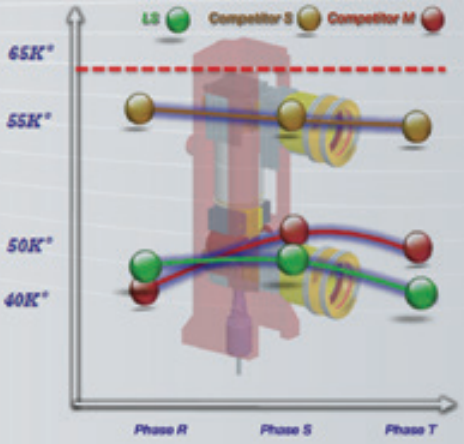

UVL type Tulip contactor

VH Type Tulip contactor

UVH type Tulip contactor

UVL-05/15/27

Breaker

UVL — **15** **H** **32** **A** **12**

Basic model name	
UVL	Susol VCB

Rated voltage (kV)	
05	4.76
15	15
27	27

Version	
P	Fixed
H	H type drawout (for MCSG)

Interrupting current (kA)	
25	25
32	31.5

Phase distance/Compatibility	
A	150mm
B	210mm
C	254mm
D	275mm
R	150mm(Compact MCSG)
S	210mm(Compact MCSG)&CI

Rated current (A)	
12	1200A
20	2000A

P type
- 4.76/15kV 25/31.5kA 1200/2000A (Phase 150/210/254)
- 27kV 25kA 1200A(Phase 254)

H type
- 4.76/15kV 25/31.5kA 1200A (Phase 150/210)
- 4.76/15kV 25/31.5kA 2000A (Phase 210)
- 4.76/15kV 25/31.5kA 1200A (Phase 150/210, Compact MCSG)
- 4.76/15kV 25/31.5kA 2000A (Phase 210, CI)

UVL-15H32A12 — **M1** **C1** **T1** **SB2** **U1** **A** **13···**

Motor control voltage	
M0	Without motor
M1	DC 110V
M2	DC 200~250V
M3	DC 125V
M4	DC 24V~30V
M5	AC 48V~60V
M6	AC 48V
M7	AC 100V~130V
M8	AC 200V~250V

Trip coil voltage	
T0	Without trip coil
T1	DC 110V
T2	DC 200~250V
T3	DC 125V
T4	DC 24V~30V
T5	AC 48V~60V
T6	AC 48V
T7	AC 100V~130V
T8	AC 200V~250V

UVT	
U0	Without UVT
U1	DC 110V
U2	DC 200~250V
U3	DC 125V
U4	DC 24V~30V
U5	AC 48V~60V
U6	AC 48V
U7	AC 100V~130V
U8	AC 200V~250V

Note) UVT is only applicable for Fixed type (P type)

Other accessories Note)	
A1	Secondary Trip coil
A2	Secondary Trip Coil with TCS Contact
A3	Position s/w(Test: 1a1b, Service: 2b)
A4	Position s/w(Test: 2a, Service: 2a)
A5	Position s/w(Test: 1a1b, Service: 1a1b)
A7	Keylock
A8	Button Padlock
A9	Button cover
AA	Lead Wire
AB	User Plug(Part)
AC	Plug Interlock
AD	Padlock(H type)
AE	MOC
AI	Mecha Shaft Interlock Lever
AL	Energy Release
AM	Keylock(KirkKey, CAMLOCK Type)
AN	Keylock(KirkKey, CN22 Type)
AP	Keylock(KirkKey, Double CAMLOCK Type)
AV	CT operated coil 1A
AW	CT operated coil 5A
AX	Button Padlock In Open

Closing coil voltage	
C0	Without closing coil
C1	DC 110V
C2	DC 200~250V
C3	DC 125V
C4	DC 24V~30V
C5	DC 48V~60V
C6	AC 48V
C7	AC 100V~130V
C8	AC 200V~250V

Connector and wire		
SA2	Standard	A type connector, 4a4b
SA4		A type connector, 10a10b
SB2		B type connector, 4a4b
SA4		B type connector, 10a10b

Note)
1. In case of selecting accessories such as A1(Secondary coil), A4(position S/W 2a2a), A7(key lock), A147 is type name in the ordering.
2. Unable to select A1(Secondary Trip Coil),U1~U8(UVT) simultaneously.
3. A3(Position S/W 1a3b), A4(Position S/W 2a2b) and A5(Position S/W 2a2b) can not be selected simultaneously.
4. A1(Secondary Trip Coil) and A2(Secondary Trip Coil with TCS Contact) can not be selected simultaneously.
5. A8(Button Padlock) and A9(Button Cover), AP(Button Padlock In Open) can not be selected simultaneously.
6. A7(Keylock), AM(KirkKey, CAMLOCK Type), AN(KirkKey, CN22 Type),AX(Double Keylock) can not be selected simultaneously.
7. When A1(Secondary Trip Coil) is selected the maximum available auxiliary contacts are 9a9b.
8. When A2(Secondary Trip Coil with TCS Contact) is selected the maximum available auxiliary contacts are 4a3b, 9a8b.
9. H type breaker includes options such as AC(Plug Interlock), AD(Padlock(H Type)), AE(MOC) as standard.
10. AI (Mecha Shaft Interlock Lever) is available only for 12kV, P type

Susol VCB & VCB compartment
VCB types and ordering information

Cradle

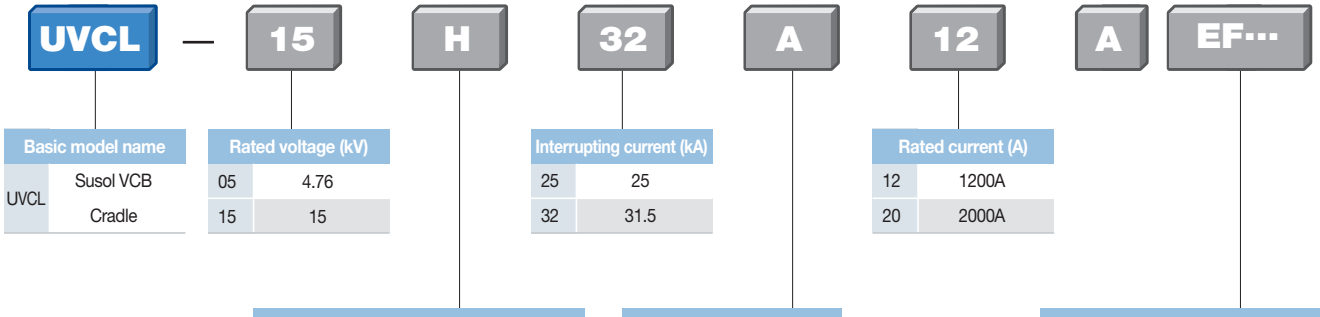

Basic model name	
UVCL	Susol VCB
	Cradle

Rated voltage (kV)	
05	4.76
15	15

Interrupting current (kA)	
25	25
32	31.5

Rated current (A)	
12	1200A
20	2000A

Version	
Ha	MCSG Cradle type
He	Compact MCSG drawout (Arc)
Hf	Compact MCSG drawout (Non-Arc)

Phase distance/Compatibility	
A	150mm
B	210mm
P	150mm
S	210mm

P and S types available for version Ha
- P type: Phase distance 150. Bushing CT installation impossible
- S type: Phase distance 210. Bushing CT installation impossible

A and B types available for version He
- A type: Phase distance 150. For 1200A only
- B type: Phase distance 210. For 1200A and 2000A

A and B types available for version Hf
(Bushing CT installable)
- B type: Phase distance 210. For 1200A and 2000A

Other accessories	
AE	Shutter padlock
AF	TOC
AG	MOC
AH	Door
AJ	Door Interlock
AK	Door Emergency Push Button
AM	H type, Lead Wire 4a4b (Standard)
AN	H type, Lead Wire 10a10b (Standard)

Note) 1. Ha type cradle cannot use a door and door options. You can use a door for He, Hf type cradle only.
2. AJ and AK can not be selected without door(AH).
3. TM(Temperature Monitoring) should be used with AL(Temperature Sensor).
4. H type lead wire(AM, AN) is required for cradle in case of using H type breaker.
5. If H type breaker options A8 (Button Padlock) and A9 (Button Cover), AP(Button Padlock In Open) are selected the cradle option AK (Door Emergency Push Button) is not available.
6. H type breaker includes options such as AE(Shutter padlock), AE(TOC), AG(MOC), AH(Door), AJ(Door Interlock) as standard.

UVH-38

Breaker

UVH — 38 H 32 E 12

Basic model name	
UVH	Susol VCB

Rated voltage (kV)	
38	38

Version	
P	Fixed
H	H type drawout (for MCSG)

Interrupting current (kA)	
32	31.5
40	40

Phase distance/Compatibility	
E	300mm

Rated current (A)	
12	1200A
20	2000A

UVH-38H32E12 — M1 C1 T1 SB2 U1 A 16···

Motor control voltage	
M0	Without motor
M1	DC 110V
M2	DC 220~250V
M3	DC 125V
M5	DC 48V
M6	AC 48V
M7	AC 110V
M8	AC 220V

Trip coil voltage	
T0	Without trip coil
T1	DC 110V
T2	DC 220~250V
T3	DC 125V
T5	DC 48V
T6	AC 48V
T7	AC 110V
T8	AC 220V

UVT	
U0	Without UVT
U1	DC 110V
U2	DC 220~250V
U3	DC 125V
U5	DC 48V
U6	AC 48V
U7	AC 110V
U8	AC 220V

Note) UVT is only applicable for Fixed type (P type)

Closing coil voltage	
C0	Without closing coil
C1	DC 110V
C2	DC 220V~250V
C3	DC 125V
C5	DC 48V
C6	AC 48V
C7	AC 110V
C8	AC 220V

Connector and wire	
SA2	Standard A type connector, 4a4b
SA4	Standard A type connector, 10a10b
SB2	Standard B type connector, 4a4b
SB4	Standard B type connector, 10a10b
SC2	Standard AutoCon. connector, 4a4b
SC4	Standard AutoCon. connector, 10a10b

1. H type is for SC2 and SC4 only. (Auto connection type)
2. P type corresponds to both SA and SB type

Other accessories	
A1	Secondary Trip coil
A2	Secondary Trip Coil with TCS Contact
A6	Latch checking s/w
A7	Keylock
A8	Button padlock
A9	Button cover
AA	Lead Wire
AB	User Plug(Part)
AE	MOC

Optional	
CTD1	Condenser Trip Device(AC110V)
CTD2	Condenser Trip Device(AC220V)
UDC1	UVT Time Delay Controller(ADC110V)
UDC2	UVT Time Delay Controller(ADC220V)
UDC3	UVT Time Delay Controller(ADC48V)
CTU	Coil Test Unit

Note)
1. In case of selecting accessories such as A1(Secondary coil), A7(key lock), A8(Button Padlock) A178 is type name in the ordering.
2. Unable to select A1(Secondary Trip Coil),U1~U8(UVT) simultaneously.
3. A1(Secondary Trip Coil) and A2(Secondary Trip Coil with TCS Contact) can not be selected simultaneously.
4. A8(Button Padlock) and A9(Button Cover) can not be selected simultaneously.
5. When A2(Secondary Trip Coil with TCS Contact) is selected the maximum available auxiliary contacts are 4a3b, 9a9b.
6. H type breaker includes options such as AE(MOC) as standard.
7. In case of selecting UVT A6 (Latch checking S/W) is not allowed. A6 (Latch checking S/W) is installed by default to make electrical interlock with UVT.

Susol VCB & VCB compartment
VCB types and ordering information

Cradle

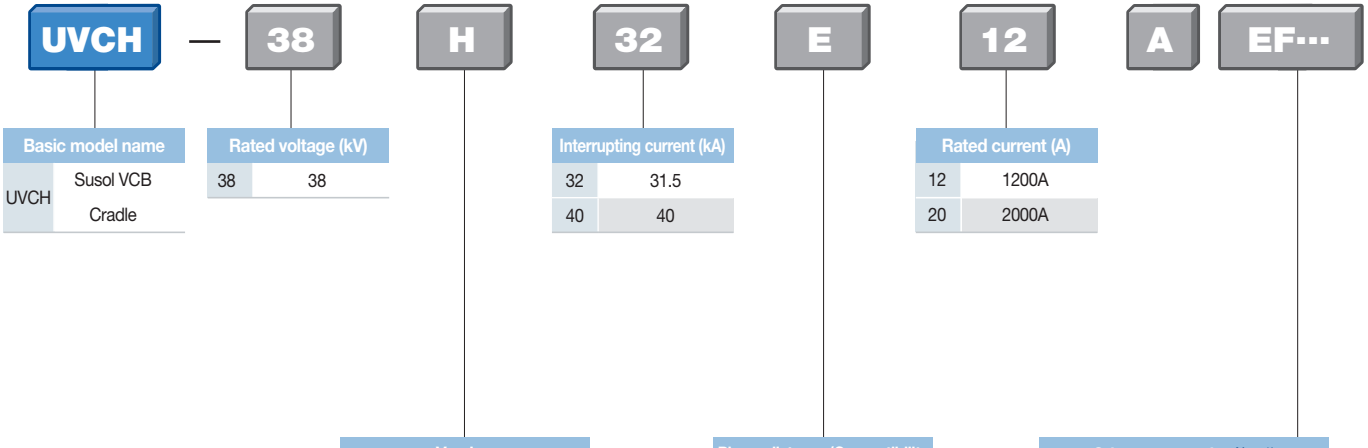

Basic model name	
UVCH	Susol VCB Cradle

Rated voltage (kV)	
38	38

Interrupting current (kA)	
32	31.5
40	40

Rated current (A)	
12	1200A
20	2000A

Version	
H	H type drawout (for MCSG)

Phase distance/Compatibility	
E	300mm

Other accessories Note1)	
AE	Shutter padlock
AF	TOC
AG	MOC
AH	Door
AJ	Door Interlock
AK	Door Emergency Push Button
AL	Temperature Sensor
AM	H type Lead Wire 4a4b
AN	MH type Lead Wire 10a10b
AS	Bushing Barrier (170BIL)

Optional	
TM	Temperature Monitoring Note3)

Note) 1. AJ and AK can not be selected without door (AH).
2. TM (Temperature Monitoring) should be used with AL (Temperature Sensor).
3. H type lead wire - one of AM, AN is required for cradle in case of H type breaker.
4. If H type breaker options A8 (Button Padlock) and A9 (Button Cover) are selected the cradle option AK (Door Emergency Push Button) is not available.
5. H type breaker includes options such as AE (Shutter padlock), AE (TOC, AG (MOC), AH (Door), AJ (Door Interlock) as standard.

CB compartment

Convenience in building switchgears

- CB compartment structure: H type cradle
- Metal isolation structure to prevent the accident from spreading and ensure safety
- Convenience of switchgear building

1 High Level MCSG (S5/15 UL AR)

4.76/15/27/38kV 25/31.5/40/50kA

- Metal isolation structure to prevent the accident spread and ensure safety
- Convenience of operation by Truck
  - Drawable in the closed position of the switchgear door
  - Racking-in/out positions indicated mechanically
- Equipped with safety devices and accessories
  - Control power connected Interlock
  - Earthing S/W and interlock, MOC/TOC (ANSI)
- Convenience in building switchgears
  - Module assembly with CB compartment

Accessories of CB compartment (H type cradle)

- MOC (Mechanism Operated Cell S/W)
- TOC (Truck Operated Cell S/W)
- Shutter Padlock
- Temperature Sensor
- Door Emergency ON/OFF Button
- Earthing switch & Accessories
  Key lock for Earthing S/W
  Locking Magnet for Earthing S/W
  Position S/W for Earthing S/W
- TM (Temperature Monitoring Unit)

2 High Level MCSG (S5/15 UL AR)

CB compartment for S5/15 UL AR

Structures and dimensions

[Unit: inch(mm)]

Front view

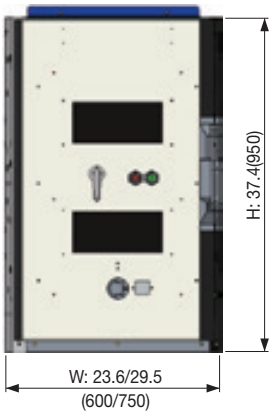

Side view

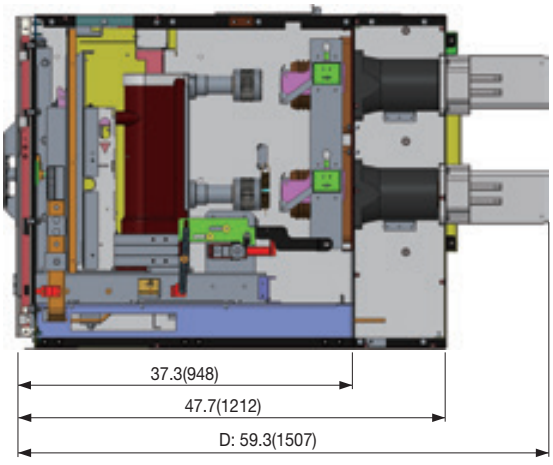

Back view

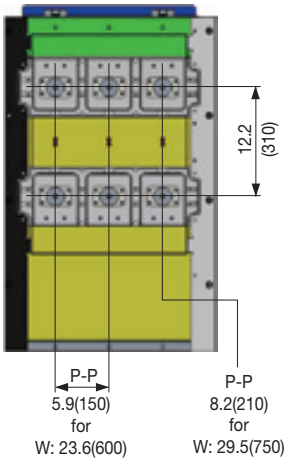

Type	Susol (UL)
Rated voltage / Current, kV/A	5~15kV / 1200, 2000A
Rated interrupting / Short time / Momentary current, Ik(kA)	25, 31.5kA / 2sec / 65, 82kAp
Rated interrupting time / Oper. duty	3 Cycle / O-0.3sec-CO-15sec-CO
AC , Impulse withstand voltage	36kV/1min, 60-95kV BIL, 1.2×50us
Aux. contacts	4a4b, 10a10b
Opening time, sec	≤0.04
Mechanical endurance / Cap. curt. swit., times	10,000 (M2) / C2
Applicable standard	IEEE Std C37.09, IEEE Std C37.20.2, ANSI C37.54, ANSI C37.55

CB compartment for S5/15 UL NAR

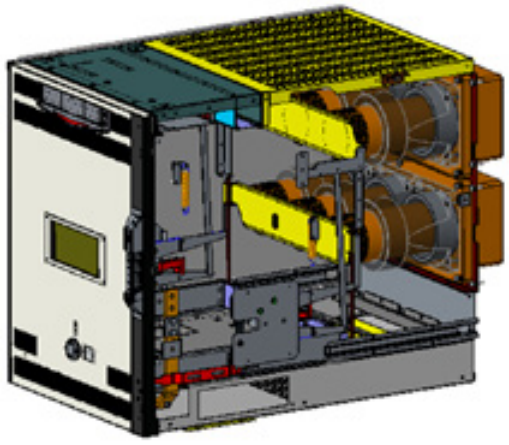

Structures and dimensions

[Unit: inch(mm)]

Front view

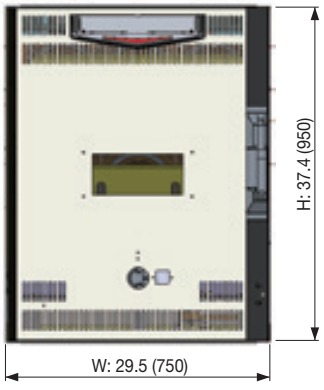

Side view

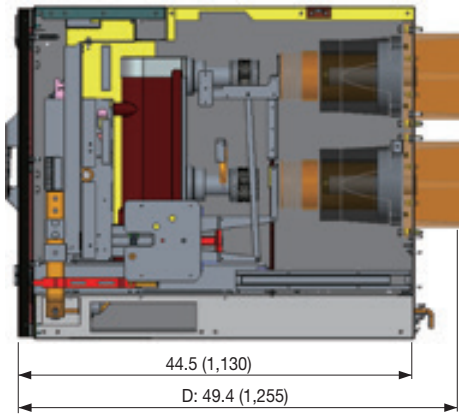

Back view

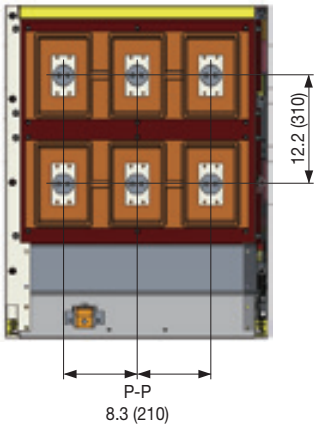

Type	Susol (UL)
Rated voltage / Current, kV/A	5~15kV / 1200, 2000A
Rated interrupting / Short time / Momentary current, Ik(kA)	25, 31.5kA / 2sec / 65, 82kAp
Rated interrupting time / Oper. duty	3 Cycle / O-0.3sec-C0-15sec-C0
AC , Impulse withstand voltage	36kV/1min, 60-95kV BIL, 1.2×50us
Aux. contacts	4a4b, 10a10b
Opening time, sec	≤0.04
Mechanical endurance / Cap. curt. swit., times	10,000 (M2) / C2
Applicable standard	IEEE Std C37.09, IEEE Std C37.20.2, ANSI C37.54, ANSI C37.55

CB compartment for S38 ANSI AR & NAR

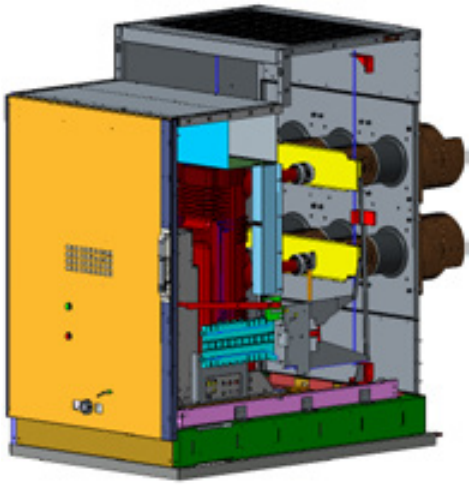

Structures and dimensions

[Unit: inch(mm)]

Front view

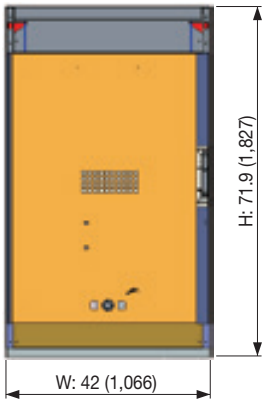

Side view

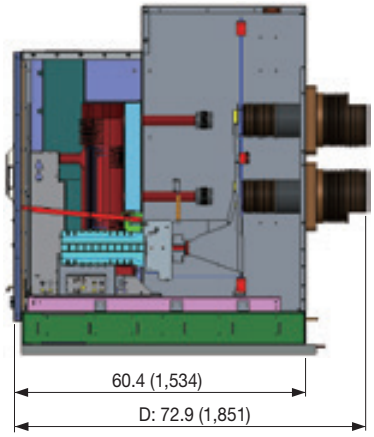

Back view

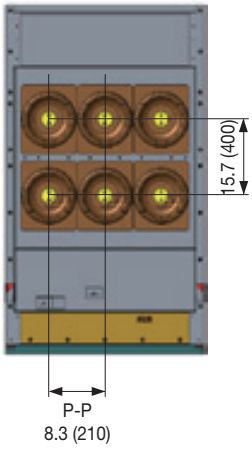

Type	Susol (UL)
Rated voltage / Current, kV/A	38kV / 1200,2000A
Rated interrupting / Short time / Momentary current, Ik(kA)	40A / 2sec / 104kAp
Rated interrupting time / Oper. duty	3 Cycle / O-0.3sec-C0-15sec-C0
AC , Impulse withstand voltage	80kV/1min, 170kV BIL, 1.2×50us
Aux. contacts	4a4b, 10a10b
Opening time, sec	≤0.04
Mechanical endurance / Cap. curt. swit., times	10,000 (M2) / C2
Applicable standard	IEEE Std C37.09, IEEE Std C37.20.2, ANSI C37.54, ANSI C37.55

Arc duct for S5/15 UL AR

- Integral and module assembly type
- Easy assembly and extendable structure
- Required few parts

No.	Itemcode	Product name	Picture
1	53524121001	DUCT ASS'Y, 1H, FRONT (1High)	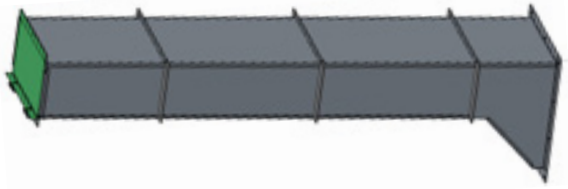
2	53524121002	DUCT ASS'Y, 1H, BACK (1High)	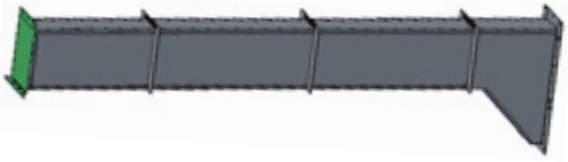
3	53524122001	DUCT ASS'Y, DUCT, 2H (2High)	

Size

DUCT ASS'Y,1H,FRONT

[Unit: inch(mm)]

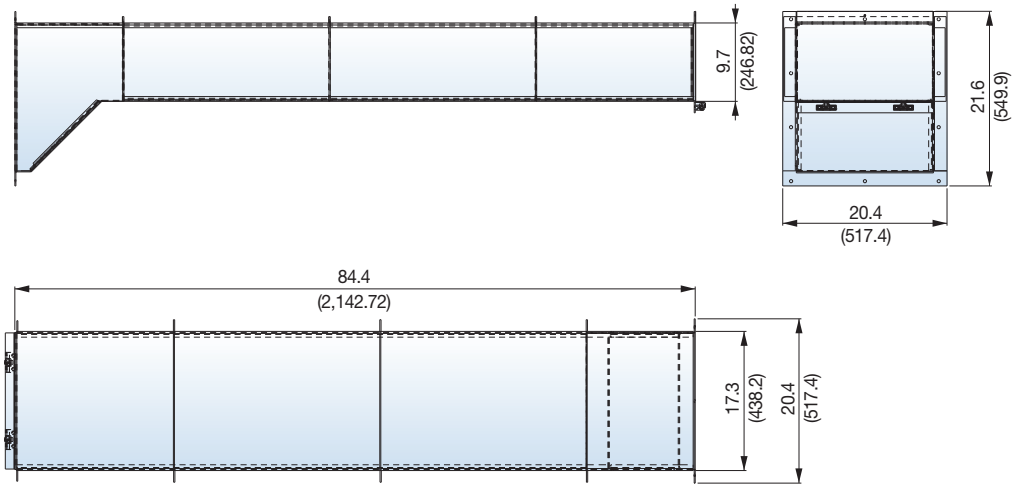

DUCT ASS'Y, 1H, BACK

[Unit: inch(mm)]

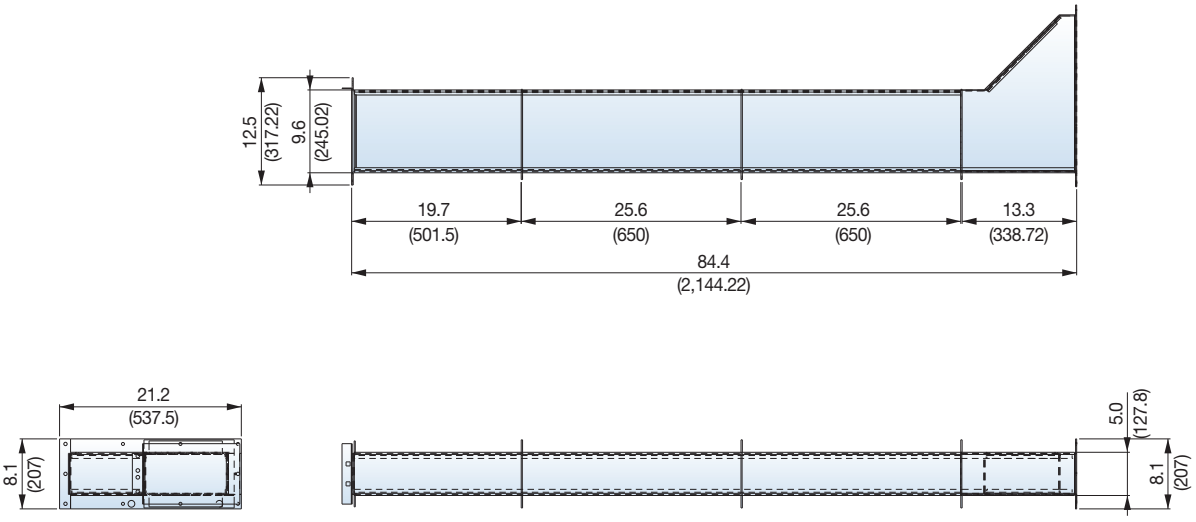

DUCT ASS'Y, DUCT, 2H

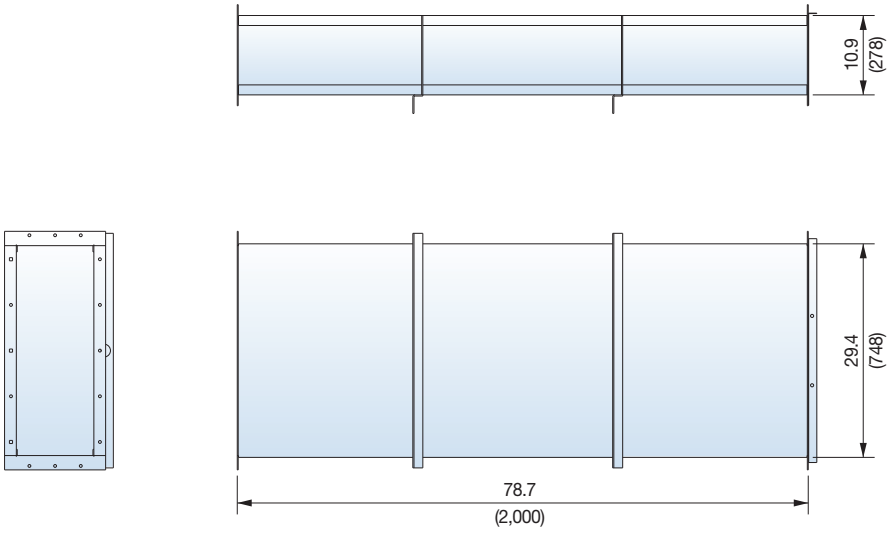

Arc duct for S38 ANSI AR

- Integral and module assembly type
- Easy assembly and extendable structure
- Required few parts

No.	Drawing No.	Product name	Picture
1	W44324275	DUCT ASS'Y, REAR	
2	W44324293	DUCT ASS'Y, FRONT	

Size

DUCT ASS'Y (REAR, FRONT)

[Unit: inch(mm)]

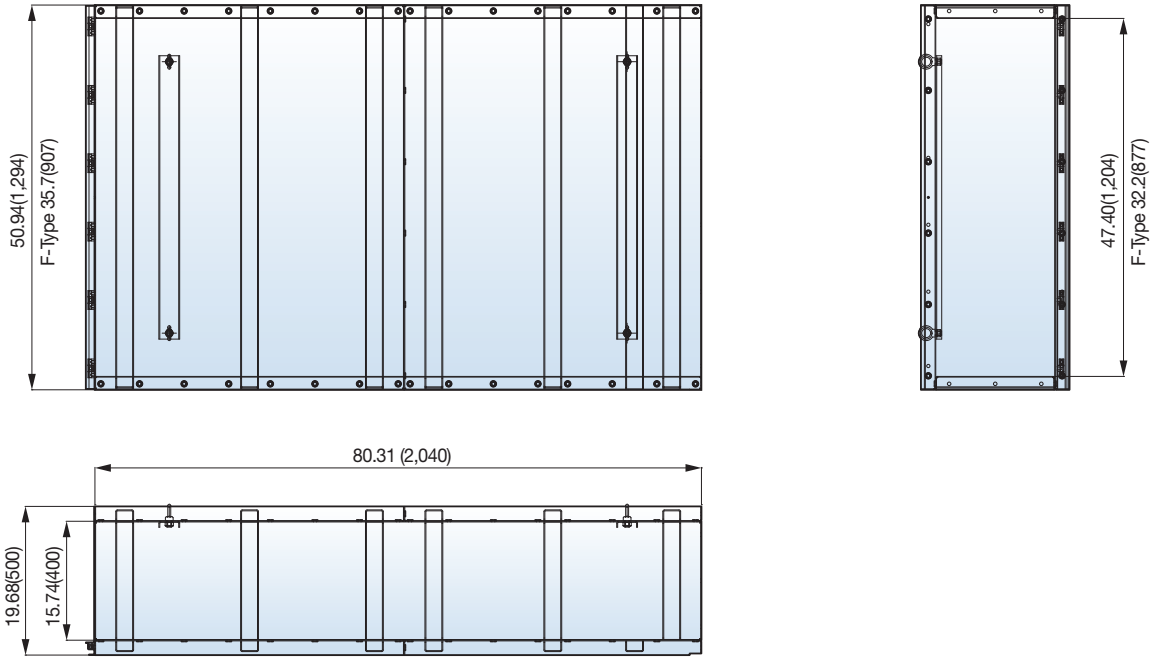

G&T device for S5/15 UL AR

[Unit: inch(mm)]

Dimensions

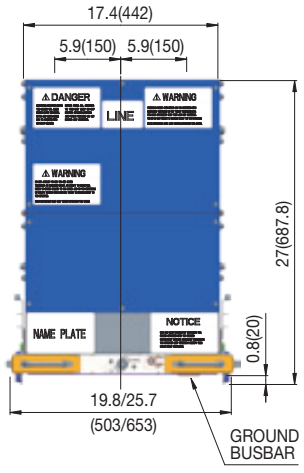

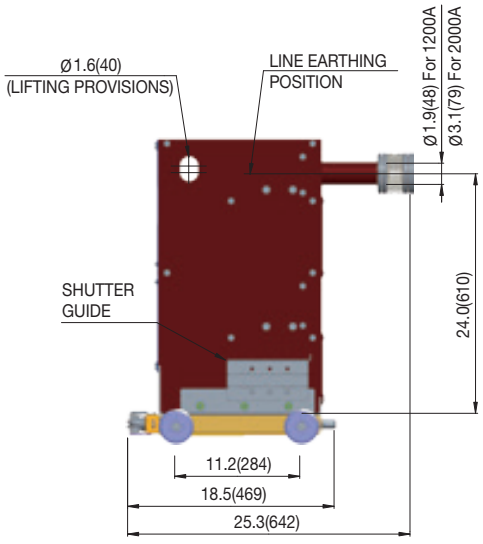

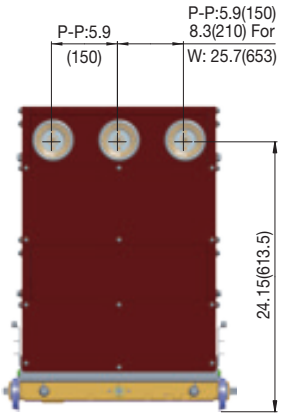

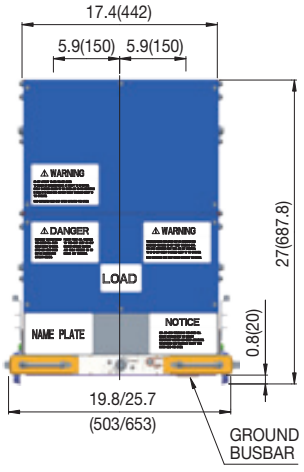

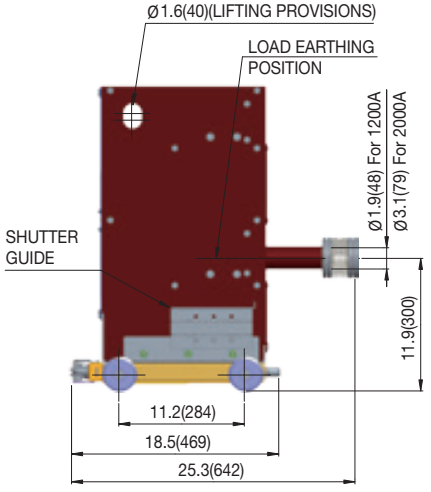

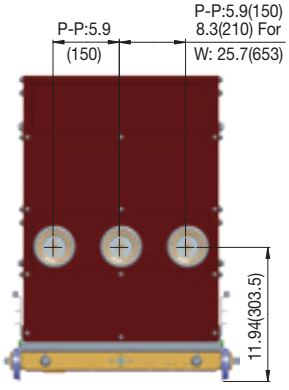

Model	Ground truck	
Rated voltage (kV)	15	
Rated current (A)	1200	2000
Phase distance, inch(mm)	5.9(150)	8.3(210)
Rated frequency (Hz)	60Hz	
Rated power frequency withstand voltage (kV/1min)	36	
Rated lighting impulse withstand voltage (kV[1.2x50㎲])	95	
Rated short-time withstand current (kA/s)	31.5/2 (Peak 81.9kA)	
Standard	ANSI C37.54,55 IEEE Std C37.20.2,6	

G&T device for S5/15 UL NAR

[Unit: inch(mm)]

Dimensions

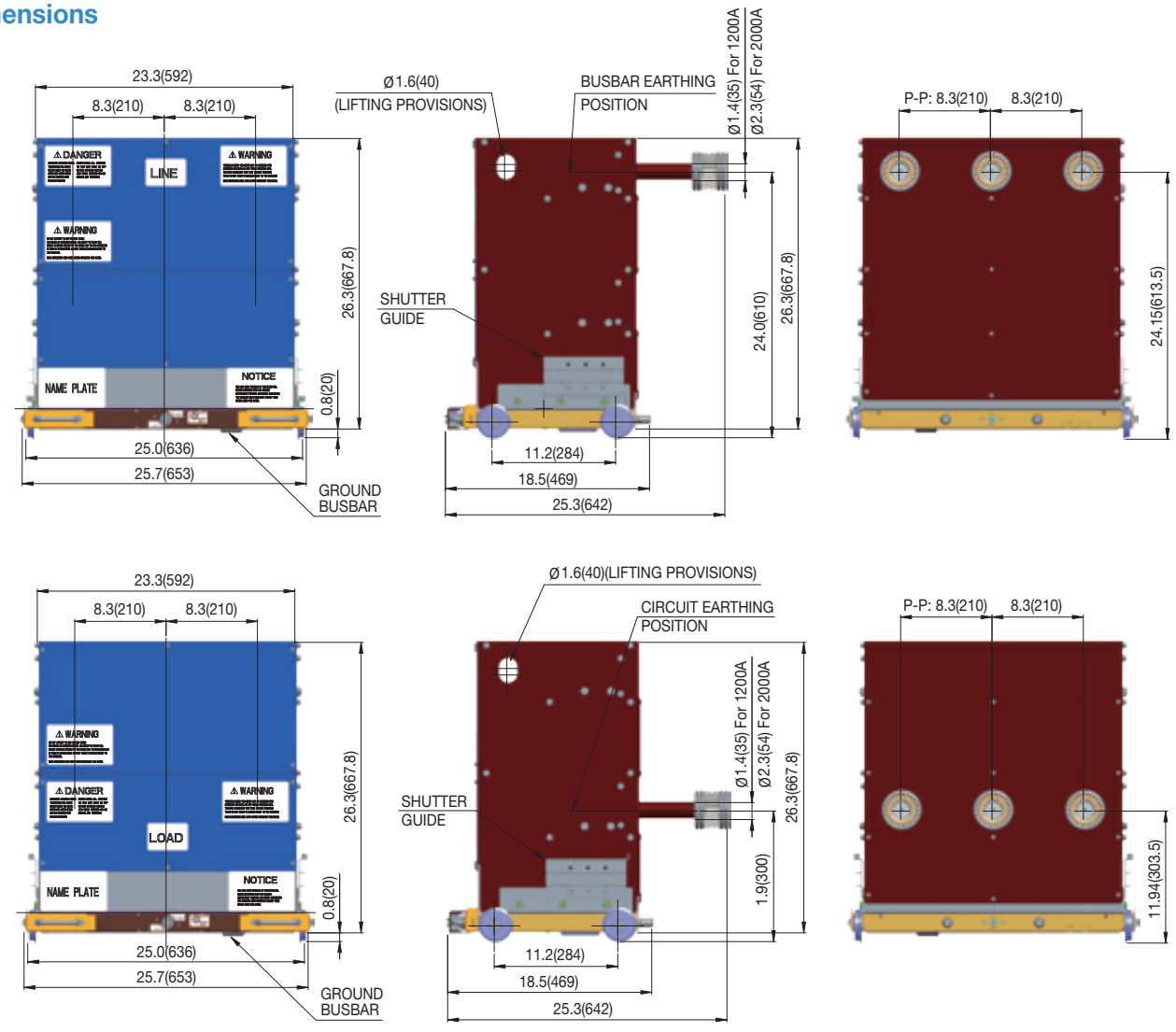

Model	Ground truck	
Rated voltage (kV)	15	
Rated current (A)	1200	2000
Phase distance, inch(mm)	8.3 (210)	
Rated frequency (Hz)	60Hz	
Rated power frequency withstand voltage (kV/1min)	36	
Rated lighting impulse withstand voltage (kV[1.2x50㎲])	95	
Rated short-time withstand current (kA/s)	31.5/2 (Peak 81.9kA)	
Standard	ANSI C37.54,55 IEEE Std C37.20.2,6	

G&T device for S38 ANSI AR & NAR

[Unit: inch(mm)]

For upper terminal

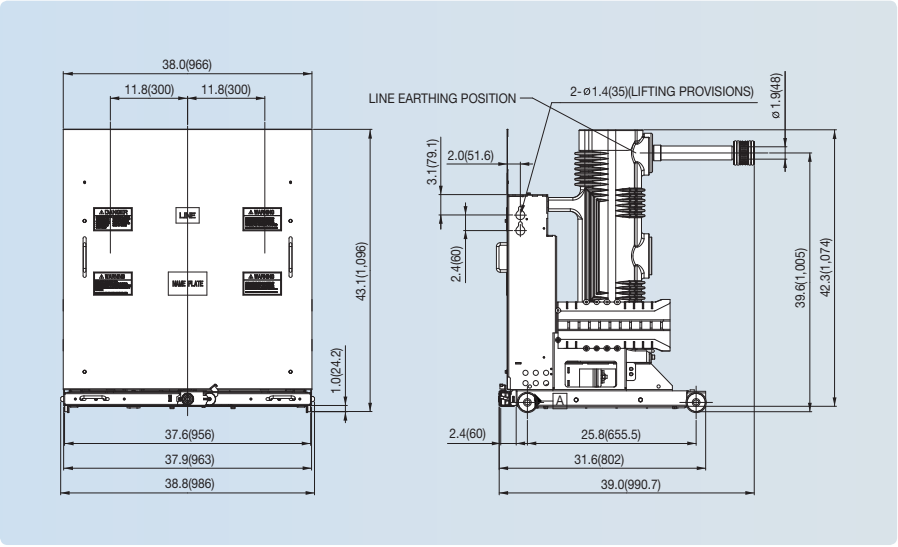

For lower terminal

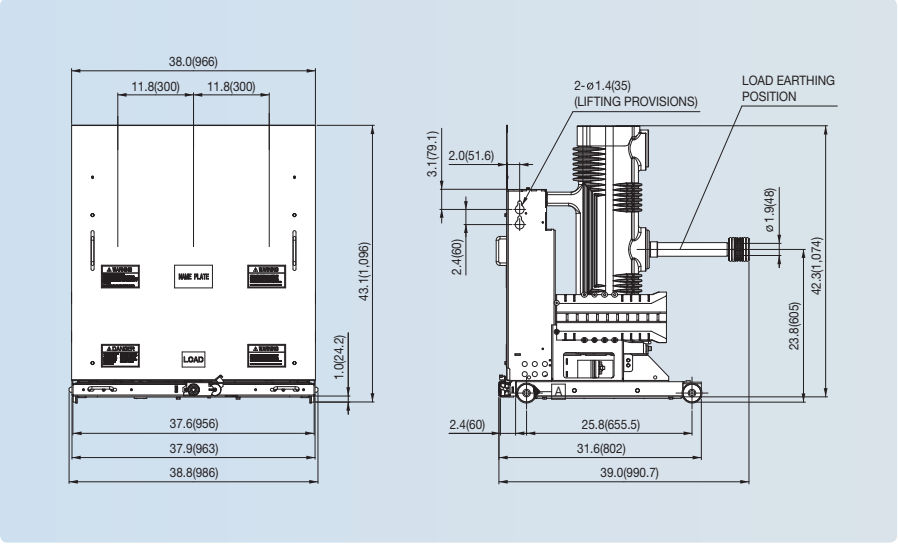

Property	Rating
Voltage class (kV)	38
Phase distance, inch(mm)	11.8(300)
Continuous current (A)	2,000
Short-time withstand current (kA, rms)	40
Momentary current (kA, Peak)	81.9
Power frequency withstand voltage (kV)	80
Lightning impulse withstand voltage (kV)	150
Size (W × H × D), inch(mm)	38.8×43.1×39.0(986×1,096×990.7)
Weight (kg)	370 (one side pole) / 380 (two side pole)

Types and ordering information

UVGT — **15** **Ms** **32** **A** **12**

Basic model name	
UVGT	Ground Truck

Rated voltage	
05	4.76kV
15	15kV
38	38kV

Version	
Ms	Simple manual devices

Interrupting current	
25	25kA
32	31.5kA
40	40kA
50	50kA

Phase distance/Compatibility	
C	254mm
E	300mm
R	150mm (Compact MCSG)
S	210mm (Compact MCSG)
U	210mm (Compact MCSG_NAR)

Rated current	
12	1200A
20	2000A
30	3000A

1. 4.76/15kV 25/31.5kA
   - Phase distance 150/210mm, 1200/2000A can be applied
2. 4.76/15kV 40/50kA
   - Phase distance 254mm, 1200/2000/3000A can be applied
3. 38kV 31.5/40kA
   - Phase distance 300mm, 1200/2000A can be applied

UVGT-15Ms32A12 — **A** **BC···**

Other accessories	
AB	One terminal set (Only upper terminal)
AC	One terminal set (Only lower terminal)
AD	Ground connection system

Lifter for S5/15 UL AR & NAR

Top view

[Unit: inch(mm)]

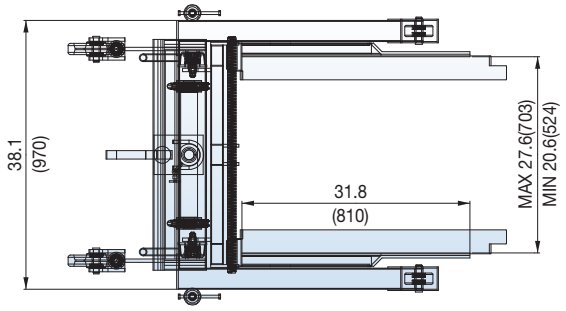

Side view

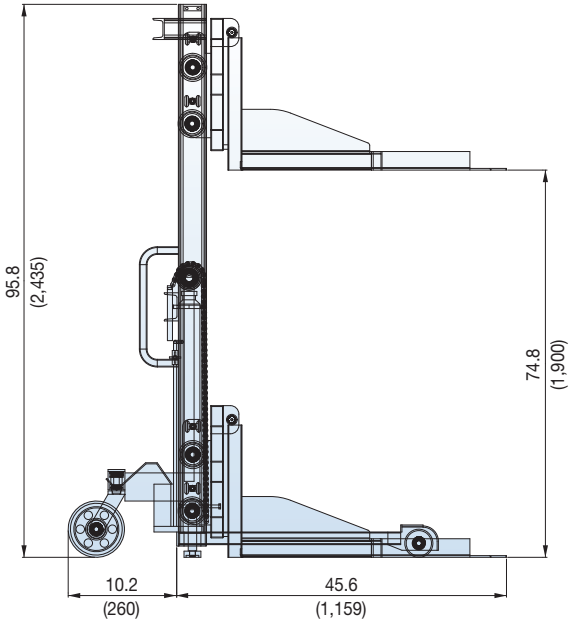

Front view

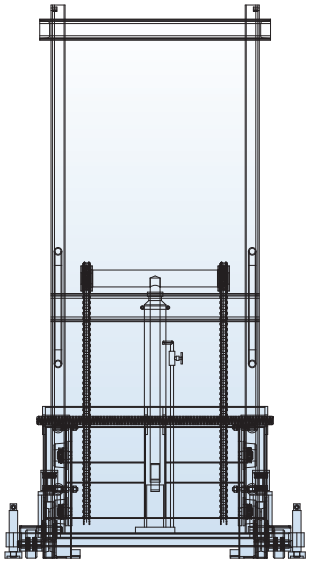

Property	Rating
Maximum live load (kg)	450
Maximum height for lift, inch(mm)	74.8(1,900)
Size (W × H × D), inch(mm)	38.1×95.8×55.8 (970×2,435×1,419)
Weight (kg)	237

Lifter for S38 ANSI AR & NAR

Top view

[Unit: inch(mm)]

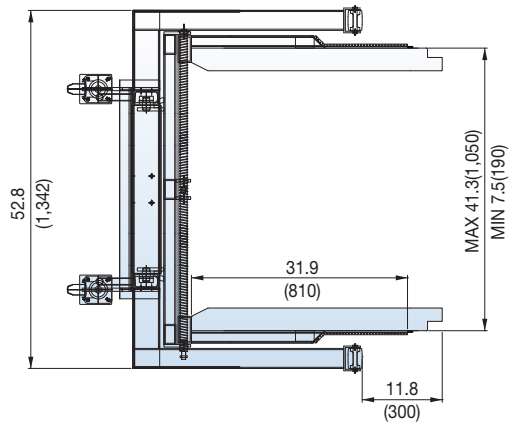

Side view

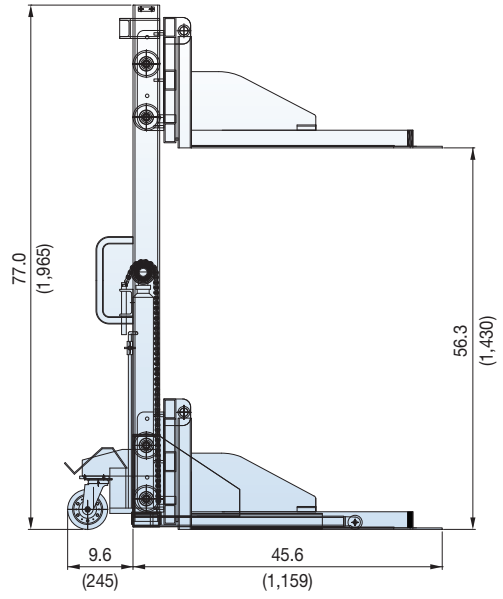

Front view

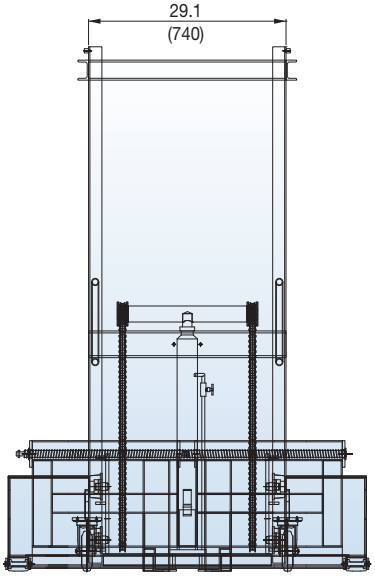

Property	Rating
Maximum live load (kg)	450
Maximum height for lift, inch(mm)	56.3(1,430)
Size (W × H × D), inch(mm)	52.8×77.4×55.3(1,342×1,965×1,404)
Weight (kg)	267

Ordering information

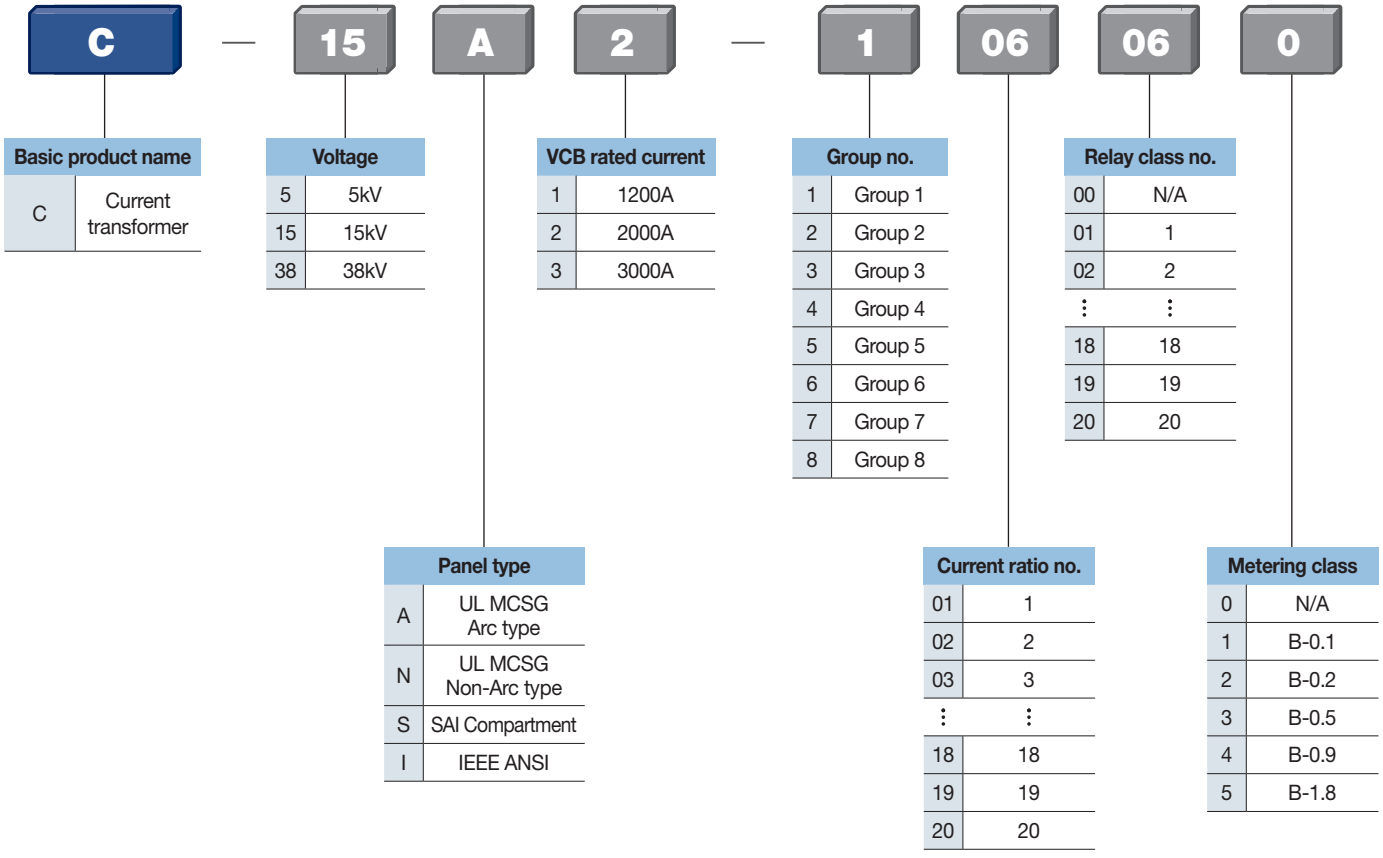

Basic product name	
C	Current transformer

Voltage	
5	5kV
15	15kV
38	38kV

VCB rated current	
1	1200A
2	2000A
3	3000A

Group no.	
1	Group 1
2	Group 2
3	Group 3
4	Group 4
5	Group 5
6	Group 6
7	Group 7
8	Group 8

Relay class no.	
00	N/A
01	1
02	2
⋮	⋮
18	18
19	19
20	20

Panel type	
A	UL MCSG Arc type
N	UL MCSG Non-Arc type
S	SAI Compartment
I	IEEE ANSI

Current ratio no.	
01	1
02	2
03	3
⋮	⋮
18	18
19	19
20	20

Metering class	
0	N/A
1	B-0.1
2	B-0.2
3	B-0.5
4	B-0.9
5	B-1.8

Ordering example 1)
- For 15kV Arc type 1200A MCSG
- 1-Core
- Current ratio : 300/1A
- Relay class : C200

▶ C-15A1-205050

Ordering example 2)
- For 15kV Arc type 2000A MCSG
- 2-Core
- Current ratio: 1000/5/5A
- Relay class: C50
- Metering class: 0.3B0.5

▶ C-15A2-413133

Ordering example 3)
- For 15kV Non-Arc type 2000A MCSG
- 2-Core
- Current ratio: 1200/5/5A
- Metering class: 0.3/0.3B1.8

▶ C-15N2-312005

CT for S5/15 UL AR

Model: UL-LSC-12 (C-5A1 or C-15A1)

Current rating Pri: sec Amperes	Continuous thermal current rating factor
50 : 5 ~ 1200 : 5	1.0

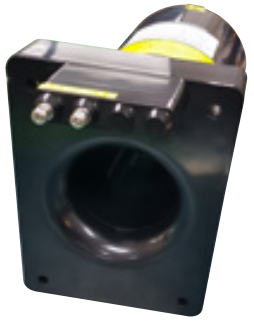

UL-LSC-12 Selecting and ordering data

Group 1

1-Core

No	Current ratio	Relay class		Metering class (at 60Hz)								
				B0.1		B0.2		B0.5		B0.9		B1.8
1	100 / 5A	C20		0.6		1.2		2.4		-		-
2	150 / 5A	C30		0.6		0.6		1.2		2.4		-
3	200 / 5A	C50		0.3		0.6		0.6		1.2		2.4
4	250 / 5A	C50		0.3		0.3		0.6		1.2		2.4
5	300 / 5A	C50		0.3		0.3		0.6		1.2		2.4
6	350 / 5A	C50		0.3		0.3		0.6		1.2		1.2
7	400 / 5A	C100		0.3		0.3		0.3		0.6		0.6
8	450 / 5A	C100	OR	0.3	OR	0.3	OR	0.3	OR	0.3	OR	0.3
9	500 / 5A	C100		0.3		0.3		0.3		0.3		0.3
10	600 / 5A	C100		0.3		0.3		0.3		0.3		0.3
11	750 / 5A	C100		0.3		0.3		0.3		0.3		0.3
12	800 / 5A	C200		0.3		0.3		0.3		0.3		0.3
13	1000 / 5A	C100		0.3		0.3		0.3		0.3		0.3
14	1100 / 5A	C100		0.3		0.3		0.3		0.3		0.3
15	1200 / 5A	C200		0.3		0.3		0.3		0.3		0.3

Group 2

1-Core

No	Current ratio	Relay class		Metering class (at 60Hz)								
				B0.1		B0.2		B0.5		B0.9		B1.8
1	100 / 1A	C100		0.6		1.2		2.4		-		-
2	150 / 1A	C200		0.6		0.6		1.2		2.4		-
3	200 / 1A	C200		0.3		0.6		0.6		1.2		2.4
4	250 / 1A	C200		0.3		0.3		0.6		1.2		2.4
5	300 / 1A	C200		0.3		0.3		0.6		1.2		2.4
6	350 / 1A	C400		0.3		0.3		0.6		1.2		1.2
7	400 / 1A	C400		0.3		0.3		0.3		0.6		0.6
8	450 / 1A	C400	OR	0.3	OR	0.3	OR	0.3	OR	0.3	OR	0.3
9	500 / 1A	C400		0.3		0.3		0.3		0.3		0.3
10	600 / 1A	C400		0.3		0.3		0.3		0.3		0.3
11	750 / 1A	C400		0.3		0.3		0.3		0.3		0.3
12	800 / 1A	C400		0.3		0.3		0.3		0.3		0.3
13	1000 / 1A	C400		0.3		0.3		0.3		0.3		0.3
14	1100 / 1A	C400		0.3		0.3		0.3		0.3		0.3
15	1200 / 1A	C400		0.3		0.3		0.3		0.3		0.3

UL-LSC-12 Selecting and ordering data

Group 3

2-Core

No	Current ratio	Relay class		Metering class (at 60Hz)								
				B0.1		B0.2		B0.5		B0.9		B1.8
1	100 / 5 / 5A	C10 / C10		2.4 / 2.4		4.8 / 4.8		4.8 / 4.8		-		-
2	150 / 5 / 5A	C10 / C10		1.2 / 1.2		2.4 / 2.4		2.4 / 2.4		4.8 / 4.8		-
3	200 / 5 / 5A	C20 / C20		1.2 / 1.2		1.2 / 1.2		2.4 / 2.4		2.4 / 2.4		4.8 / 4.8
4	250 / 5 / 5A	C30 / C30		0.6 / 0.6		0.6 / 0.6		1.2 / 1.2		2.4 / 2.4		4.8 / 4.8
5	300 / 5 / 5A	C30 / C30		0.6 / 0.6		0.6 / 0.6		1.2 / 1.2		2.4 / 2.4		4.8 / 4.8
6	350 / 5 / 5A	C30 / C30		0.3 / 0.3		0.6 / 0.6		1.2 / 1.2		2.4 / 2.4		2.4 / 2.4
7	400 / 5 / 5A	C50 / C50		0.3 / 0.3		0.3 / 0.3		0.6 / 0.6		1.2 / 1.2		1.2 / 1.2
8	450 / 5 / 5A	C50 / C50	OR	0.3 / 0.3	OR	0.3 / 0.3	OR	0.6 / 0.6	OR	0.6 / 0.6	OR	0.6 / 0.6
9	500 / 5 / 5A	C50 / C50		0.3 / 0.3		0.3 / 0.3		0.6 / 0.6		0.6 / 0.6		0.6 / 0.6
10	600 / 5 / 5A	C50 / C50		0.3 / 0.3		0.3 / 0.3		0.3 / 0.3		0.3 / 0.3		0.3 / 0.3
11	750 / 5 / 5A	C50 / C50		0.3 / 0.3		0.3 / 0.3		0.3 / 0.3		0.3 / 0.3		0.3 / 0.3
12	800 / 5 / 5A	C100 / C100		0.3 / 0.3		0.3 / 0.3		0.3 / 0.3		0.3 / 0.3		0.3 / 0.3
13	1000 / 5 / 5A	C50 / C50		0.3 / 0.3		0.3 / 0.3		0.3 / 0.3		0.3 / 0.3		0.3 / 0.3
14	1100 / 5 / 5A	C50 / C50		0.3 / 0.3		0.3 / 0.3		0.3 / 0.3		0.3 / 0.3		0.3 / 0.3
15	1200 / 5 / 5A	C50 / C50		0.3 / 0.3		0.3 / 0.3		0.3 / 0.3		0.3 / 0.3		0.3 / 0.3

Group 4

Relay & Metering 2-Core

No	Current ratio	Relay class		Metering class (at 60Hz)								
				B0.1		B0.2		B0.5		B0.9		B1.8
1	100 / 5 / 5A	C10		2.4		4.8		4.8		-		-
2	150 / 5 / 5A	C20		1.2		2.4		2.4		4.8		-
3	200 / 5 / 5A	C20		1.2		1.2		2.4		2.4		4.8
4	250 / 5 / 5A	C30		0.6		0.6		1.2		2.4		4.8
5	300 / 5 / 5A	C30		0.6		0.6		1.2		2.4		4.8
6	350 / 5 / 5A	C30		0.3		0.6		1.2		2.4		2.4
7	400 / 5 / 5A	C50		0.3		0.3		0.6		1.2		1.2
8	450 / 5 / 5A	C50	AND	0.3	OR	0.3	OR	0.6	OR	0.6	OR	0.6
9	500 / 5 / 5A	C50		0.3		0.3		0.6		0.6		0.6
10	600 / 5 / 5A	C50		0.3		0.3		0.3		0.3		0.6
11	750 / 5 / 5A	C100		0.3		0.3		0.3		0.3		0.3
12	800 / 5 / 5A	C100		0.3		0.3		0.3		0.3		0.3
13	1000 / 5 / 5A	C100		0.3		0.3		0.3		0.3		0.3
14	1100 / 5 / 5A	C100		0.3		0.3		0.3		0.3		0.3
15	1200 / 5 / 5A	C100		0.3		0.3		0.3		0.3		0.3

UL-LSC-12 Selecting and ordering data

Group 5

2-Core

No	Current ratio	Relay class		Metering class (at 60Hz)								
				B0.1		B0.2		B0.5		B0.9		B1.8
1	100 / 1 / 1A	C50 / C50		2.4 / 2.4		4.8 / 4.8		4.8 / 4.8		-		-
2	150 / 1 / 1A	C100 / C100		1.2 / 1.2		2.4 / 2.4		2.4 / 2.4		4.8 / 4.8		-
3	200 / 1 / 1A	C100 / C100		1.2 / 1.2		1.2 / 1.2		2.4 / 2.4		2.4 / 2.4		4.8 / 4.8
4	250 / 1 / 1A	C100 / C100		0.6 / 0.6		0.6 / 0.6		1.2 / 1.2		2.4 / 2.4		4.8 / 4.8
5	300 / 1 / 1A	C100 / C100		0.6 / 0.6		0.6 / 0.6		1.2 / 1.2		2.4 / 2.4		4.8 / 4.8
6	350 / 1 / 1A	C200 / C200		0.3 / 0.3		0.6 / 0.6		1.2 / 1.2		2.4 / 2.4		2.4 / 2.4
7	400 / 1 / 1A	C200 / C200		0.3 / 0.3		0.3 / 0.3		0.6 / 0.6		1.2 / 1.2		1.2 / 1.2
8	450 / 1 / 1A	C200 / C200	OR	0.3 / 0.3	OR	0.3 / 0.3	OR	0.6 / 0.6	OR	0.6 / 0.6	OR	0.6 / 0.6
9	500 / 1 / 1A	C200 / C200		0.3 / 0.3		0.3 / 0.3		0.6 / 0.6		0.6 / 0.6		0.6 / 0.6
10	600 / 1 / 1A	C200 / C200		0.3 / 0.3		0.3 / 0.3		0.3 / 0.3		0.3 / 0.3		0.3 / 0.3
11	750 / 1 / 1A	C200 / C200		0.3 / 0.3		0.3 / 0.3		0.3 / 0.3		0.3 / 0.3		0.3 / 0.3
12	800 / 1 / 1A	C200 / C200		0.3 / 0.3		0.3 / 0.3		0.3 / 0.3		0.3 / 0.3		0.3 / 0.3
13	1000 / 1 / 1A	C200 / C200		0.3 / 0.3		0.3 / 0.3		0.3 / 0.3		0.3 / 0.3		0.3 / 0.3
14	1100 / 1 / 1A	C200 / C200		0.3 / 0.3		0.3 / 0.3		0.3 / 0.3		0.3 / 0.3		0.3 / 0.3
15	1200 / 1 / 1A	C200 / C200		0.3 / 0.3		0.3 / 0.3		0.3 / 0.3		0.3 / 0.3		0.3 / 0.3

Group 6

Relay & Metering 2-Core

No	Current ratio	Relay class		Metering class (at 60Hz)								
				B0.1		B0.2		B0.5		B0.9		B1.8
1	100 / 1 / 1A	C50		2.4		4.8		4.8		-		-
2	150 / 1 / 1A	C100		1.2		2.4		2.4		4.8		-
3	200 / 1 / 1A	C100		1.2		1.2		2.4		2.4		4.8
4	250 / 1 / 1A	C100		0.6		0.6		1.2		2.4		4.8
5	300 / 1 / 1A	C100		0.6		0.6		1.2		2.4		4.8
6	350 / 1 / 1A	C200		0.3		0.6		1.2		2.4		2.4
7	400 / 1 / 1A	C200		0.3		0.3		0.6		1.2		1.2
8	450 / 1 / 1A	C200	AND	0.3	OR	0.3	OR	0.6	OR	0.6	OR	0.6
9	500 / 1 / 1A	C200		0.3		0.3		0.6		0.6		0.6
10	600 / 1 / 1A	C200		0.3		0.3		0.3		0.3		0.6
11	750 / 1 / 1A	C200		0.3		0.3		0.3		0.3		0.3
12	800 / 1 / 1A	C200		0.3		0.3		0.3		0.3		0.3
13	1000 / 1 / 1A	C200		0.3		0.3		0.3		0.3		0.3
14	1100 / 1 / 1A	C200		0.3		0.3		0.3		0.3		0.3
15	1200 / 1 / 1A	C200		0.3		0.3		0.3		0.3		0.3

CT for S5/15 UL AR

Model: UL-LSC-20 (C-5A2 or C-15A2)

Current rating Pri: sec Amperes	Continuous thermal current rating factor
50 : 5 ~ 2000 : 5	1.0

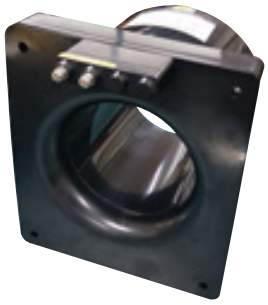

UL-LSC-20 Selecting and ordering data

Group 1 1-Core

No	Current ratio	Relay class		Metering class (at 60Hz)							
				B0.1		B0.2		B0.5		B0.9		B1.8
1	100 / 5A	C10		2.4		4.8		-		-		-
2	150 / 5A	C20		0.6		1.2		2.4		-		-
3	200 / 5A	C30		0.6		1.2		2.4		-		-
4	250 / 5A	C30		0.6		0.6		1.2		2.4		-
5	300 / 5A	C50		0.6		0.6		1.2		1.2		2.4
6	350 / 5A	C50		0.3		0.6		0.6		1.2		2.4
7	400 / 5A	C50		0.3		0.6		0.6		1.2		1.2
8	450 / 5A	C50		0.3		0.3		0.3		0.6		1.2
9	500 / 5A	C100	OR	0.3	OR	0.3	OR	0.3	OR	0.6	OR	1.2
10	600 / 5A	C100		0.3		0.3		0.3		0.6		1.2
11	750 / 5A	C100		0.3		0.3		0.3		0.3		0.6
12	800 / 5A	C100		0.3		0.3		0.3		0.3		0.6
13	1000 / 5A	C200		0.3		0.3		0.3		0.3		0.3
14	1100 / 5A	C200		0.3		0.3		0.3		0.3		0.3
15	1200 / 5A	C200		0.3		0.3		0.3		0.3		0.3
16	1500 / 5A	C200		0.3		0.3		0.3		0.3		0.3
17	1600 / 5A	C200		0.3		0.3		0.3		0.3		0.3
18	2000 / 5A	C200		0.3		0.3		0.3		0.3		0.3

Group 2 1-Core

No	Current ratio	Relay class		Metering class (at 60Hz)							
				B0.1		B0.2		B0.5		B0.9		B1.8
1	100 / 1A	C50		2.4		4.8		-		-		-
2	150 / 1A	C100		0.6		1.2		2.4		-		-
3	200 / 1A	C100		0.6		1.2		2.4		-		-
4	250 / 1A	C200		0.6		0.6		1.2		2.4		-
5	300 / 1A	C200		0.6		0.6		1.2		1.2		2.4
6	350 / 1A	C200		0.3		0.6		0.6		1.2		2.4
7	400 / 1A	C200		0.3		0.6		0.6		1.2		1.2
8	450 / 1A	C200		0.3		0.3		0.3		0.6		1.2
9	500 / 1A	C400	OR	0.3	OR	0.3	OR	0.3	OR	0.6	OR	1.2
10	600 / 1A	C400		0.3		0.3		0.3		0.6		1.2
11	750 / 1A	C400		0.3		0.3		0.3		0.3		0.6
12	800 / 1A	C400		0.3		0.3		0.3		0.3		0.6
13	1000 / 1A	C400		0.3		0.3		0.3		0.3		0.3
14	1100 / 1A	C400		0.3		0.3		0.3		0.3		0.3
15	1200 / 1A	C400		0.3		0.3		0.3		0.3		0.3
16	1500 / 1A	C800		0.3		0.3		0.3		0.3		0.3
17	1600 / 1A	C800		0.3		0.3		0.3		0.3		0.3
18	2000 / 1A	C800		0.3		0.3		0.3		0.3		0.3

UL-LSC-20 Selecting and ordering data

Group 3

2-Core

No	Current ratio	Relay class		Metering class (at 60Hz)							
				B0.1		B0.2		B0.5		B0.9		B1.8
1	100 / 5 / 5A	-		-		-		-		-		-
2	150 / 5 / 5A	-		-		-		-		-		-
3	200 / 5 / 5A	-		-		-		-		-		-
4	250 / 5 / 5A	C10 / C10		2.4 / 2.4		4.8 / 4.8		-		-		-
5	300 / 5 / 5A	C20 / C20		2.4 / 2.4		4.8 / 4.8		4.8 / 4.8		-		-
6	350 / 5 / 5A	C20 / C20		1.2 / 1.2		2.4 / 2.4		2.4 / 2.4		4.8 / 4.8		-
7	400 / 5 / 5A	C30 / C30		1.2 / 1.2		2.4 / 2.4		2.4 / 2.4		4.8 / 4.8		4.8 / 4.8
8	450 / 5 / 5A	C30 / C30		0.6 / 0.6		1.2 / 1.2		1.2 / 1.2		2.4 / 2.4		2.4 / 2.4
9	500 / 5 / 5A	C30 / C30		0.6 / 0.6		0.6 / 0.6		1.2 / 1.2		1.2 / 1.2		2.4 / 2.4
10	600 / 5 / 5A	C30 / C30	OR	0.6 / 0.6	OR	0.6 / 0.6	OR	0.6 / 0.6	OR	1.2 / 1.2	OR	1.2 / 1.2
11	750 / 5 / 5A	C50 / C50		0.3 / 0.3		0.6 / 0.6		0.6 / 0.6		0.6 / 0.6		0.6 / 0.6
12	800 / 5 / 5A	C50 / C50		0.3 / 0.3		0.3 / 0.3		0.3 / 0.3		0.6 / 0.6		0.6 / 0.6
13	1000 / 5 / 5A	C50 / C50		0.3 / 0.3		0.3 / 0.3		0.3 / 0.3		0.3 / 0.3		0.6 / 0.6
14	1100 / 5 / 5A	C50 / C50		0.3 / 0.3		0.3 / 0.3		0.3 / 0.3		0.3 / 0.3		0.3 / 0.3
15	1200 / 5 / 5A	C50 / C50		0.3 / 0.3		0.3 / 0.3		0.3 / 0.3		0.3 / 0.3		0.3 / 0.3
16	1500 / 5 / 5A	C50 / C50		0.3 / 0.3		0.3 / 0.3		0.3 / 0.3		0.3 / 0.3		0.3 / 0.3
17	1600 / 5 / 5A	C50 / C50		0.3 / 0.3		0.3 / 0.3		0.3 / 0.3		0.3 / 0.3		0.3 / 0.3
18	2000 / 5 / 5A	C100 / C100		0.3 / 0.3		0.3 / 0.3		0.3 / 0.3		0.3 / 0.3		0.3 / 0.3

Group 4

Relay & Metering 2-Core

No	Current ratio	Relay class		Metering class (at 60Hz)							
				B0.1		B0.2		B0.5		B0.9		B1.8
1	100 / 5 / 5A	-		-		-		-		-		-
2	150 / 5 / 5A	-		-		-		-		-		-
3	200 / 5 / 5A	-		-		-		-		-		-
4	250 / 5 / 5A	C10		2.4		4.8		-		-		-
5	300 / 5 / 5A	C20		2.4		4.8		4.8		-		-
6	350 / 5 / 5A	C20		1.2		2.4		2.4		4.8		-
7	400 / 5 / 5A	C30		1.2		2.4		2.4		4.8		4.8
8	450 / 5 / 5A	C30		0.6		1.2		1.2		2.4		2.4
9	500 / 5 / 5A	C30		0.6		0.6		1.2		1.2		2.4
10	600 / 5 / 5A	C30	AND	0.6	OR	0.6	OR	0.6	OR	1.2	OR	1.2
11	750 / 5 / 5A	C50		0.3		0.6		0.6		0.6		0.6
12	800 / 5 / 5A	C50		0.3		0.3		0.3		0.6		0.6
13	1000 / 5 / 5A	C50		0.3		0.3		0.3		0.3		0.6
14	1100 / 5 / 5A	C50		0.3		0.3		0.3		0.3		0.3
15	1200 / 5 / 5A	C50		0.3		0.3		0.3		0.3		0.3
16	1500 / 5 / 5A	C50		0.3		0.3		0.3		0.3		0.3
17	1600 / 5 / 5A	C50		0.3		0.3		0.3		0.3		0.3
18	2000 / 5 / 5A	C100		0.3		0.3		0.3		0.3		0.3

UL-LSC-20 Selecting and ordering data

Group 5

2-Core

No	Current ratio	Relay class		Metering class (at 60Hz)								
				B0.1		B0.2		B0.5		B0.9		B1.8
1	100 / 1 / 1A	-		-		-		-		-		-
2	150 / 1 / 1A	-		-		-		-		-		-
3	200 / 1 / 1A	-		-		-		-		-		-
4	250 / 1 / 1A	C50 / C50		2.4 / 2.4		4.8 / 4.8		-		-		-
5	300 / 1 / 1A	C100 / C100		2.4 / 2.4		4.8 / 4.8		4.8 / 4.8		-		-
6	350 / 1 / 1A	C100 / C100		1.2 / 1.2		2.4 / 2.4		2.4 / 2.4		4.8 / 4.8		-
7	400 / 1 / 1A	C100 / C100		1.2 / 1.2		2.4 / 2.4		2.4 / 2.4		4.8 / 4.8		4.8 / 4.8
8	450 / 1 / 1A	C100 / C100		0.6 / 0.6		1.2 / 1.2		1.2 / 1.2		2.4 / 2.4		2.4 / 2.4
9	500 / 1 / 1A	C100 / C100		0.6 / 0.6		0.6 / 0.6		1.2 / 1.2		1.2 / 1.2		2.4 / 2.4
10	600 / 1 / 1A	C100 / C100	OR	0.6 / 0.6	OR	0.6 / 0.6	OR	0.6 / 0.6	OR	1.2 / 1.2	OR	1.2 / 1.2
11	750 / 1 / 1A	C200 / C200		0.3 / 0.3		0.6 / 0.6		0.6 / 0.6		0.6 / 0.6		0.6 / 0.6
12	800 / 1 / 1A	C200 / C200		0.3 / 0.3		0.3 / 0.3		0.3 / 0.3		0.6 / 0.6		0.6 / 0.6
13	1000 / 1 / 1A	C200 / C200		0.3 / 0.3		0.3 / 0.3		0.3 / 0.3		0.3 / 0.3		0.6 / 0.6
14	1100 / 1 / 1A	C200 / C200		0.3 / 0.3		0.3 / 0.3		0.3 / 0.3		0.3 / 0.3		0.3 / 0.3
15	1200 / 1 / 1A	C200 / C200		0.3 / 0.3		0.3 / 0.3		0.3 / 0.3		0.3 / 0.3		0.3 / 0.3
16	1500 / 1 / 1A	C200 / C200		0.3 / 0.3		0.3 / 0.3		0.3 / 0.3		0.3 / 0.3		0.3 / 0.3
17	1600 / 1 / 1A	C200 / C200		0.3 / 0.3		0.3 / 0.3		0.3 / 0.3		0.3 / 0.3		0.3 / 0.3
18	2000 / 1 / 1A	C200 / C200		0.3 / 0.3		0.3 / 0.3		0.3 / 0.3		0.3 / 0.3		0.3 / 0.3

Group 6

Relay & Metering 2-Core

No	Current ratio	Relay class		Metering class (at 60Hz)								
				B0.1		B0.2		B0.5		B0.9		B1.8
1	100 / 1 / 1A	-		-		-		-		-		-
2	150 / 1 / 1A	-		-		-		-		-		-
3	200 / 1 / 1A	-		-		-		-		-		-
4	250 / 1 / 1A	C50		2.4		4.8		-		-		-
5	300 / 1 / 1A	C100		2.4		4.8		4.8		-		-
6	350 / 1 / 1A	C100		1.2		2.4		2.4		4.8		-
7	400 / 1 / 1A	C100		1.2		2.4		2.4		4.8		4.8
8	450 / 1 / 1A	C100		0.6		1.2		1.2		2.4		2.4
9	500 / 1 / 1A	C100		0.6		0.6		1.2		1.2		2.4
10	600 / 1 / 1A	C100	AND	0.6	OR	0.6	OR	0.6	OR	1.2	OR	1.2
11	750 / 1 / 1A	C200		0.3		0.6		0.6		0.6		0.6
12	800 / 1 / 1A	C200		0.3		0.3		0.3		0.6		0.6
13	1000 / 1 / 1A	C200		0.3		0.3		0.3		0.3		0.6
14	1100 / 1 / 1A	C200		0.3		0.3		0.3		0.3		0.3
15	1200 / 1 / 1A	C200		0.3		0.3		0.3		0.3		0.3
16	1500 / 1 / 1A	C200		0.3		0.3		0.3		0.3		0.3
17	1600 / 1 / 1A	C200		0.3		0.3		0.3		0.3		0.3
18	2000 / 1 / 1A	C200		0.3		0.3		0.3		0.3		0.3

CT for S5/15 UL NAR

Model: DCIB-L87 (C-5N1 or C-5N2 or C-15N1 or C-15N2)

Ratio	Continuous thermal current rating factor
50/5A ~ 2000/5A	1.0

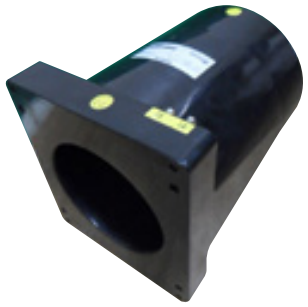

DCIB-L87 Selecting and ordering data

Group 1

1-Core

No	Current ratio	Relay class		Metering class (at 60Hz)								
				B0.1		B0.2		B0.5		B0.9		B1.8
1	75 / 5A	C5		2.4		4.8		-		-		-
2	100 / 5A	C10		2.4		4.8		-		-		-
3	150 / 5A	C20		0.6		1.2		2.4		-		-
4	200 / 5A	C20		0.6		1.2		2.4		-		-
5	250 / 5A	C30		0.6		0.6		1.2		2.4		-
6	300 / 5A	C30		0.6		0.6		1.2		1.2		2.4
7	350 / 5A	C30		0.3		0.6		0.6		1.2		2.4
8	400 / 5A	C30		0.3		0.6		0.6		1.2		1.2
9	450 / 5A	C30		0.3		0.3		0.3		0.6		1.2
10	500 / 5A	C50	OR	0.3	OR	0.3	OR	0.3	OR	0.6	OR	1.2
11	600 / 5A	C50		0.3		0.3		0.3		0.6		1.2
12	750 / 5A	C50		0.3		0.3		0.3		0.3		0.6
13	800 / 5A	C50		0.3		0.3		0.3		0.3		0.6
14	1000 / 5A	C100		0.3		0.3		0.3		0.3		0.3
15	1100 / 5A	C100		0.3		0.3		0.3		0.3		0.3
16	1200 / 5A	C100		0.3		0.3		0.3		0.3		0.3
17	1500 / 5A	C100		0.3		0.3		0.3		0.3		0.3
18	1600 / 5A	C100		0.3		0.3		0.3		0.3		0.3
19	2000 / 5A	C200		0.3		0.3		0.3		0.3		0.3

Group 2

1-Core

No	Current ratio	Relay class		Metering class (at 60Hz)								
				B0.1		B0.2		B0.5		B0.9		B1.8
1	50 / 1A	C5		4.8		-		-		-		-
2	75 / 1A	C10		2.4		4.8		-		-		-
3	100 / 1A	C10		2.4		4.8		-		-		-
4	150 / 1A	C20		0.6		1.2		2.4		-		-
5	200 / 1A	C20		0.6		1.2		2.4		-		-
6	250 / 1A	C30		0.6		0.6		1.2		2.4		-
7	300 / 1A	C30		0.6		0.6		1.2		1.2		2.4
8	350 / 1A	C30		0.3		0.6		0.6		1.2		2.4
9	400 / 1A	C50		0.3		0.6		0.6		1.2		1.2
10	450 / 1A	C50	OR	0.3	OR	0.3	OR	0.3	OR	0.6	OR	1.2
11	500 / 1A	C50		0.3		0.3		0.3		0.6		1.2
12	600 / 1A	C50		0.3		0.3		0.3		0.6		1.2
13	750 / 1A	C50		0.3		0.3		0.3		0.3		0.6
14	800 / 1A	C100		0.3		0.3		0.3		0.3		0.6
15	1000 / 1A	C100		0.3		0.3		0.3		0.3		0.3
16	1100 / 1A	C100		0.3		0.3		0.3		0.3		0.3
17	1200 / 1A	C100		0.3		0.3		0.3		0.3		0.3
18	1500 / 1A	C100		0.3		0.3		0.3		0.3		0.3
19	1600 / 1A	C100		0.3		0.3		0.3		0.3		0.3
20	2000 / 1A	C200		0.3		0.3		0.3		0.3		0.3

DCIB-L87 Selecting and ordering data

Group 3

2-Core

No	Current ratio	Relay class		Metering class (at 60Hz)								
				B0.1		B0.2		B0.5		B0.9		B1.8
1	250 / 5 / 5A	C10 / C10		2.4 / 2.4		4.8 / 4.8		-		-		-
2	300 / 5 / 5A	C10 / C10		2.4 / 2.4		4.8 / 4.8		4.8 / 4.8		-		-
3	350 / 5 / 5A	C20 / C20		1.2 / 1.2		2.4 / 2.4		2.4 / 2.4		4.8 / 4.8		-
4	400 / 5 / 5A	C20 / C20		1.2 / 1.2		2.4 / 2.4		2.4 / 2.4		4.8 / 4.8		4.8 / 4.8
5	450 / 5 / 5A	C20 / C20		0.6 / 0.6		1.2 / 1.2		1.2 / 1.2		2.4 / 2.4		2.4 / 2.4
6	500 / 5 / 5A	C20 / C20		0.6 / 0.6		0.6 / 0.6		1.2 / 1.2		1.2 / 1.2		2.4 / 2.4
7	600 / 5 / 5A	C20 / C20		0.6 / 0.6		0.6 / 0.6		0.6 / 0.6		1.2 / 1.2		1.2 / 1.2
8	750 / 5 / 5A	C20 / C20	OR	0.3 / 0.3	OR	0.6 / 0.6	OR	0.6 / 0.6	OR	0.6 / 0.6	OR	0.6 / 0.6
9	800 / 5 / 5A	C30 / C30		0.3 / 0.3		0.3 / 0.3		0.3 / 0.3		0.6 / 0.6		0.6 / 0.6
10	1000 / 5 / 5A	C30 / C30		0.3 / 0.3		0.3 / 0.3		0.3 / 0.3		0.3 / 0.3		0.3 / 0.3
11	1100 / 5 / 5A	C30 / C30		0.3 / 0.3		0.3 / 0.3		0.3 / 0.3		0.3 / 0.3		0.3 / 0.3
12	1200 / 5 / 5A	C30 / C30		0.3 / 0.3		0.3 / 0.3		0.3 / 0.3		0.3 / 0.3		0.3 / 0.3
13	1500 / 5 / 5A	C50 / C50		0.3 / 0.3		0.3 / 0.3		0.3 / 0.3		0.3 / 0.3		0.3 / 0.3
14	1600 / 5 / 5A	C50 / C50		0.3 / 0.3		0.3 / 0.3		0.3 / 0.3		0.3 / 0.3		0.3 / 0.3
15	2000 / 5 / 5A	C50 / C50		0.3 / 0.3		0.3 / 0.3		0.3 / 0.3		0.3 / 0.3		0.3 / 0.3

Group 4

Relay & Metering 2-Core

No	Current ratio	Relay class		Metering class (at 60Hz)								
				B0.1		B0.2		B0.5		B0.9		B1.8
1	250 / 5 / 5A	C10		2.4		4.8		-		-		-
2	300 / 5 / 5A	C10		2.4		4.8		4.8		-		-
3	350 / 5 / 5A	C20		1.2		2.4		2.4		4.8		-
4	400 / 5 / 5A	C20		1.2		2.4		2.4		4.8		4.8
5	450 / 5 / 5A	C20		0.6		1.2		1.2		2.4		2.4
6	500 / 5 / 5A	C20		0.6		0.6		1.2		1.2		2.4
7	600 / 5 / 5A	C20		0.6		0.6		0.6		1.2		1.2
8	750 / 5 / 5A	C20	AND	0.3	OR	0.6	OR	0.6	OR	0.6	OR	0.6
9	800 / 5 / 5A	C30		0.3		0.3		0.3		0.6		0.6
10	1000 / 5 / 5A	C30		0.3		0.3		0.3		0.3		0.3
11	1100 / 5 / 5A	C30		0.3		0.3		0.3		0.3		0.3
12	1200 / 5 / 5A	C30		0.3		0.3		0.3		0.3		0.3
13	1500 / 5 / 5A	C50		0.3		0.3		0.3		0.3		0.3
14	1600 / 5 / 5A	C50		0.3		0.3		0.3		0.3		0.3
15	2000 / 5 / 5A	C50		0.3		0.3		0.3		0.3		0.3

CT for S38 ANSI AR & NAR

Model: DCIB-L81 (C-38I1 or C-38I2)

APPLICATION	For relaying and metering
FREQUENCY	60Hz
INSULATION CLASS	600V, BIL 10kV full wave
THERMAL RATING	1.0 at 30℃
OUTER ENCAPSULATION	ABS CASE

Height	11.46"	**Depth**	5.98"
Width	11.46"	**Weight**	10.5kg

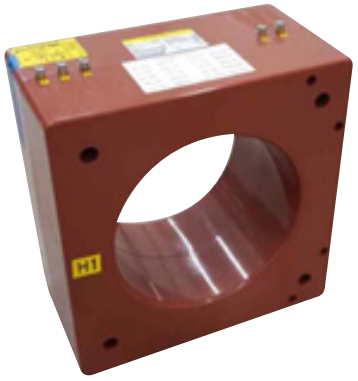

DCIB-L81 Selecting and ordering data

Group 1 1-Core

No	Current ratio	Relay class		Metering class (at 60Hz)								
				B0.1		B0.2		B0.5		B0.9		B1.8
1	600 / 5A	C200	AND	0.3	OR	0.3	OR	0.3	OR	0.3	OR	0.3
2	1200 / 5A	C400		0.3		-		0.3		0.3		0.3
3	2000 / 5A	C400		0.3		0.3		0.3		0.3		0.3
4	3000 / 5A	C800		0.3		0.3		0.3		0.3		0.3
5	4000 / 5A	C800		0.3		0.3		0.3		0.3		0.3
6	5000 / 5A	C800		0.3		0.3		0.3		0.3		0.3

Ordering information

Basic product name	
V	Voltage transformer

Voltage	
5	5kV
15	15kV
38	38kV

Panel type	
A	UL MCSG Arc type
N	UL MCSG Non-Arc type
S	SA Compartment
I	IEEE ANSI

Voltage rating no.	
01	1
02	2
03	3
⋮	⋮
11	11
12	12
13	13

Ordering example 1)
- For 15kV Arc type MCSG
- Voltage rating: 7200/√3 : 120/√3V
  ▶ V-15A-06

Ordering example 2)
- For 15kV Non-Arc type MCSG
- Voltage rating: 13200/√3 : 120/√3V
  ▶ V-15N-09

Ordering example 3)
- For 38kV MCSG
- Voltage rating: 27600/√3 : 115/√3V
  ▶ V-38I-01

VT for S5/15 UL AR

Model: UL-LSP-15N (V-5A or V-15A)

Ratio	Thermal rating	
	Ambient	
	30℃	55℃
20 : 1 ~ 125 : 1	1500VA	1000VA

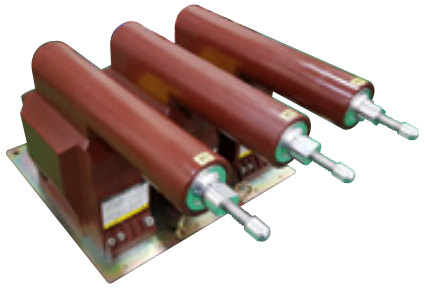

UL-LSP-15N Selecting and ordering data

No	Voltage rating	Ratio	Accuracy / Burden	Not	Voltag
1	2400/√3 : 120/√3V	20 : 1	0.3 Y & 1.2 Z	60Hz	15kV
2	3300/√3 : 110/√3V	30 : 1	0.3 Y & 1.2 Z	50Hz	15kV
3	4200/√3 : 120/√3V	35 : 1	0.3 Y & 1.2 Z	60Hz	15kV
4	4800/√3 : 120/√3V	40 : 1	0.3 Y & 1.2 Z	60Hz	15kV
5	6600/√3 : 110/√3V	60 : 1	0.3 Y & 1.2 Z	50Hz	15kV
6	7200/√3 : 120/√3V	60 : 1	0.3 Y & 1.2 Z	60Hz	15kV
7	8400/√3 : 120/√3V	70 : 1	0.3 Y & 1.2 Z	60Hz	15kV
8	11000/√3 : 110/√3V	100 : 1	0.3 Y & 1.2 Z	50Hz	15kV
9	12000/√3 : 120/√3V	100 : 1	0.3 Y & 1.2 Z	60Hz	15kV
10	13200/√3 : 120/√3V	110 : 1	0.3 Y & 1.2 Z	60Hz	15kV
11	13800/√3 : 120/√3V	115 : 1	0.3 Y & 1.2 Z	60Hz	15kV
12	14400/√3 : 120/√3V	120 : 1	0.3 Y & 1.2 Z	60Hz	15kV
13	15000/√3 : 120/√3V	125 : 1	0.3 Y & 1.2 Z	60Hz	15kV

VT for S5/15 UL AR (SA Compartment)

Model: DPE-15NF (V-5S or V-15S)

Ratio	Thermal rating	
	Ambient	
	30℃	55℃
20 : 1 ~ 120 : 1	1500VA	1000VA

DPE-15NF Selecting and ordering data

No	Voltage rating	Ratio	Accuracy / Burden	Not	Voltag
1	2400/√3 : 120/√3V	20 : 1	0.3 Y & 1.2 Z	60Hz	15kV
2	4160/√3 : 120/√3V	35 : 1	0.3 Y & 1.2 Z	60Hz	15kV
3	4200/√3 : 120/√3V	35 : 1	0.3 Y & 1.2 Z	60Hz	15kV
4	4760/√3 : 120/√3V	40 : 1	0.3 Y & 1.2 Z	60Hz	15kV
5	4800/√3 : 120/√3V	40 : 1	0.3 Y & 1.2 Z	60Hz	15kV
6	7200/√3 : 120/√3V	60 : 1	0.3 Y & 1.2 Z	60Hz	15kV
7	8400/√3 : 120/√3V	70 : 1	0.3 Y & 1.2 Z	60Hz	15kV
8	12000/√3 : 120/√3V	100 : 1	0.3 Y & 1.2 Z	60Hz	15kV
9	13200/√3 : 120/√3V	110 : 1	0.3 Y & 1.2 Z	60Hz	15kV
10	13800/√3 : 120/√3V	115 : 1	0.3 Y & 1.2 Z	60Hz	15kV
11	14400/√3 : 120/√3V	120 : 1	0.3 Y & 1.2 Z	60Hz	15kV
12	15000/√3 : 120/√3V	125 : 1	0.3 Y & 1.2 Z	60Hz	15kV

VT for S5/15 UL NAR

Model: DPE-18NF (V-5N or V-15N)

Ratio	Thermal rating	
	Ambient	
	30℃	55℃
20 : 1 ~ 125 : 1	1500VA	1000VA

DPE-18NF Selecting and ordering data

No	Voltage rating	Ratio	Accuracy / Burden	Not	Voltag
1	2400/√3 : 120/√3V	20 : 1	0.3 Y & 1.2 Z	60Hz	5.6kV
2	4160/√3 : 120/√3V	35 : 1	0.3 Y & 1.2 Z	50Hz	5.6kV
3	4200/√3 : 120/√3V	35 : 1	0.3 Y & 1.2 Z	60Hz	5.6kV
4	4760/√3 : 120/√3V	40 : 1	0.3 Y & 1.2 Z	60Hz	5.6kV
5	4800/√3 : 120/√3V	40 : 1	0.3 Y & 1.2 Z	50Hz	5.6kV
6	7200/√3 : 120/√3V	60 : 1	0.3 Y & 1.2 Z	60Hz	9.52kV
7	8400/√3 : 120/√3V	70 : 1	0.3 Y & 1.2 Z	60Hz	9.52kV
8	12000/√3 : 120/√3V	100 : 1	0.3 Y & 1.2 Z	50Hz	15.5kV
9	13200/√3 : 120/√3V	110 : 1	0.3 Y & 1.2 Z	60Hz	15.5kV
10	13800/√3 : 120/√3V	115 : 1	0.3 Y & 1.2 Z	60Hz	15.5kV
11	14400/√3 : 120/√3V	120 : 1	0.3 Y & 1.2 Z	60Hz	15.5kV
12	15000/√3 : 120/√3V	125 : 1	0.3 Y & 1.2 Z	60Hz	15.5kV

VT for S38 ANSI AR & NAR

Model: DPE-36NF (V-38I)

APPLICATION	For relaying and metering
FREQUENCY	60Hz
INSULATION CLASS	IEEE: 36.5kV, BIL 200kV full wave IEC: 36kV, BIL 170kV full wave
THERMAL RATING	1000 VA at 30℃
INSULATION	Epoxy mold
WEIGHT	Approx. 55kg

DPE-36NF Selecting and ordering data

No	Voltage rating	Ratio	Accuracy / Burden	Not	Voltag
1	27600/√3 : 115/√3V	240 : 1	0.3 Y & 1.2 Z	60Hz	36.5KV
2	134500/√3 : 115/√3V	300 : 1	0.3 Y & 1.2 Z	60Hz	36.5KV

RRS for S5/15 UL NAR

Remote racking system provides a safer operating environment through the proven method of adding distance between the operator and the arc flash incident energy at the switchgear site. LS can supply CBS's Arc Safe RRS as an option.

Product	Product description	Lead Time
RRS-3-LS VCB VL - Drive Assembly Only	Remote racking system - Single tool RRS-3 (Racking motor only) for LS VCB VL.	10 - 16 Weeks

Project references

C PJT

Project description	Data center
Location	Chicago, Illinois
Project owner	D company
Delivery	2017
Supply scope	VCB, CB Compartment for MV SWGR

A PJT

Project description	Data center
Location	Ashburn, Virginia
Project owner	D company
Delivery	2017
Supply scope	VCB, CB Compartment for MV SWGR

LGE TN PJT

Project description	Home appliance manufacturing facility
Location	Clarksville, Tennessee
Project owner	LG Electronics
EPC contractor	DPR
Delivery	2018
Supply scope	MV SWGR, LV SWGR, Distribution board, Transformer, etc.

LGE NJ new headquarters PJT

Project description	LG Electronic's new North American headquarters
Location	Englewood Cliffs, New Jersey
Project owner	LG Electronics
EPC contractor	Tuner
Delivery	2018
Supply scope	MV SWGR , LV SWGR, Distribution board, Transformer, etc.

SKI GA PJT

Project description	Battery manufacturing plant
Location	Jackson County, Georgia
Project owner	SK Innovation
EPC contractor	SK E&C
Delivery	2020
Supply scope	MV SWGR, LV SWGR, MCC, Panel board, Transformer, Busduct, etc.

Partnership
Business package

Complete package, more than you can possibly imagine!

Business concept	Phase 1 Full package Except LV wiring	Phase 2 Compartment + Core Part	Technical Agreement
● : Supply ◐ : Discussable - : N.A	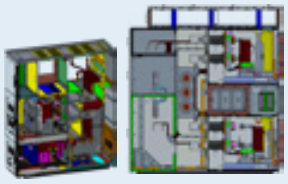	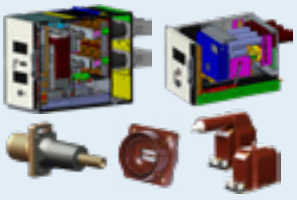	
Assembled switchgear (Elevation)	●	●	●
CB+PT compartment	-	-	-
Busbar compartment (Drawing)	-	●	●
Cable compartment (Drawing)	-	●	●
LV compartment (Drawing)	-	●	●
VCB	-	-	-
Ground & Test device	-	-	-
Technical consulting	●	●	●
Technical specification	●	●	●
Drawings	-	●	●
Assembly instruction	●	●	●
QC check list	●	●	●
Technical training (Basic/Per-dium)	●	●	●
Assembly training (Basic/Per-dium)	●	●	●
Inspection training (Basic/Per-dium)	●	●	●

Partnership
Business model

LS provides MCSG business solutions to the customers in a wide range of markets.

Product range
4.76kV~38kV Medium Voltage Metal Clad Switchgears

Phases of supplying scope

Stage I	Stage II	Stage III
LS delivers entire switchgear, except the low voltage compartment. Partners manufactures the low voltage compartment & low voltage wiring.	LS supplies CB+PT compartment. Partners can choose the optional parts.	LS supplies VCB only. Partners can choose the optional parts
▶ CB Compartment ▶ PT Compartment ▶ Busbar Compartment ▶ Cable Compartment ▶ LV Compartment	▶ CB Compartment ▶ PT Compartment ▶ Busbar Compartment ▶ Cable Compartment ▶ LV Compartment	▶ CB Compartment ▶ PT Compartment ▶ Busbar Compartment ▶ Cable Compartment ▶ LV Compartment

LS' supply | Partner's scope

Support Services
- Technical consulting
- Technical specification & drawings
- Assembly guide / manual
- QC process drawing
- Technical, assembly and inspection training

Stage I

LS	Partner
• CB compartment • PT compartment • Busbar compartment • Cable compartment • LV compartment (Only enclosure)	• Protection relay and LV control wiring • Power fuse for PT • Surge arrester (If applicable on electric systwms)

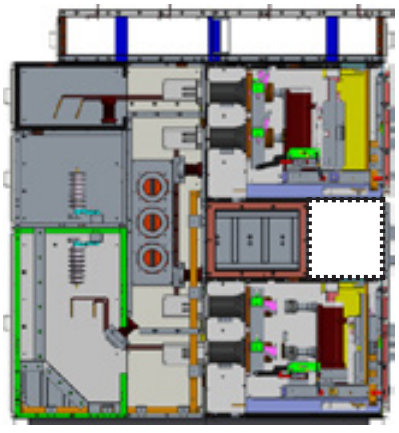

LS supply

Support services

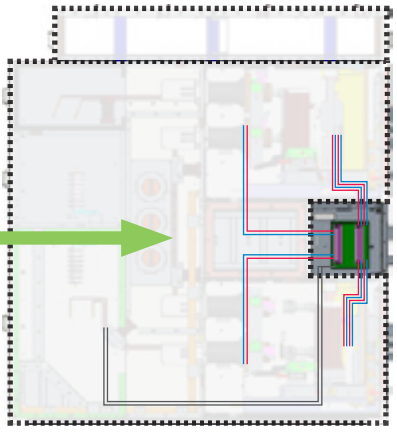

Support services
- Technical consulting
- Technical specification & drawings
- Assembly guide/manual
- QC process drawing
- Technical training
- Assembly training
- Inspection training

Partnership
Business model

Stage II

LS

- CB compartment
- PT compartment
- Core parts and accessories
  - Insulators, Bushings
  - CT

Partner

- LV compartment, Protection relay, LV wiring
- Busbar compartment
- Cable compartment
- Power fuse for PT
- Surge arrester (If applicable on electric systwms)

CB/PT Comp.

Core parts

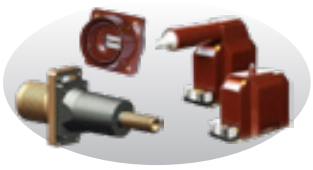

LS supply

Support services

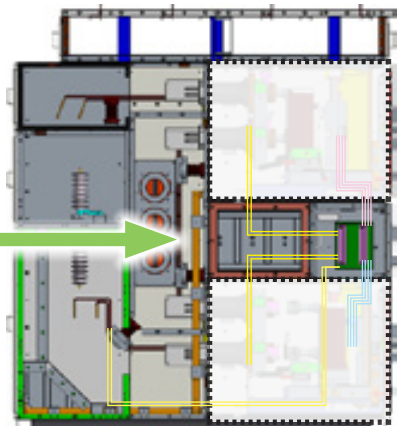

Support services

- Technical consulting
- Technical specification & drawings
- Assembly guide/manual
- QC process drawing
- Technical training
- Assembly training
- Inspection training

Stage III

LS

- VCB and Accessories

Partner

- LV compartment, Protection relay, LV wiring
- PT compartment
- Busbar compartment
- Cable compartment

Susol
Vacuum Circuit Breakers

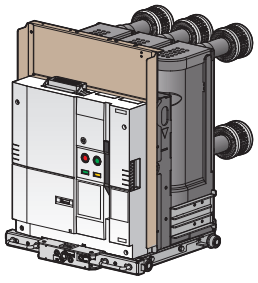

LS supply

Support services

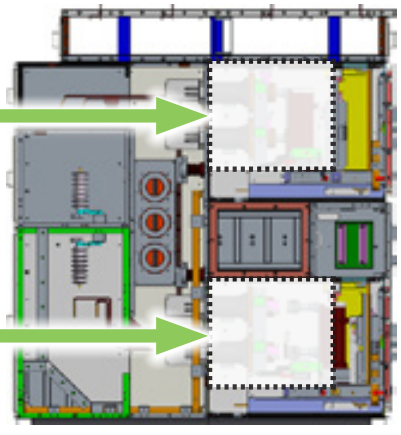

Support services

- Technical consulting
- Technical specification & drawings
- Assembly guide/manual
- QC process drawing
- Technical training
- Assembly training
- Inspection training

Support services

Consulting services and technical assistance are provided according to the stage of business.

Technical documentation

- Design drawings
- Assembly guide / manual
- Operation & maintenance

Production training & support

- Technical training
- Assembly training
- Inspection training

Test certificates

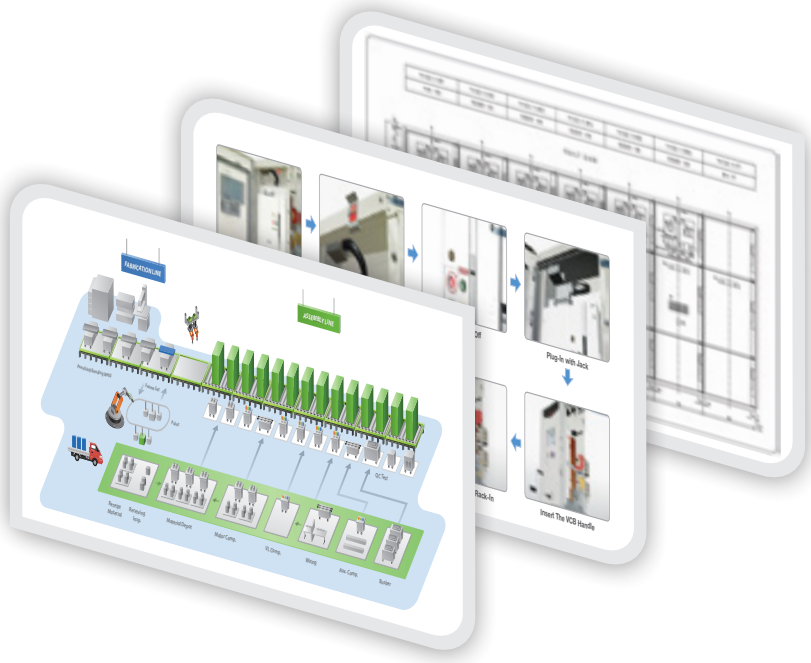

Technical documentation

- Design drawings
- Assembly guide / manual
- Operation & maintenance

Production training & support

- Technical training
- Assembly training
- Inspection training

Test certificates

Design drawings

Bill of material

Assembly guide

Operation manual

Maintenance manual

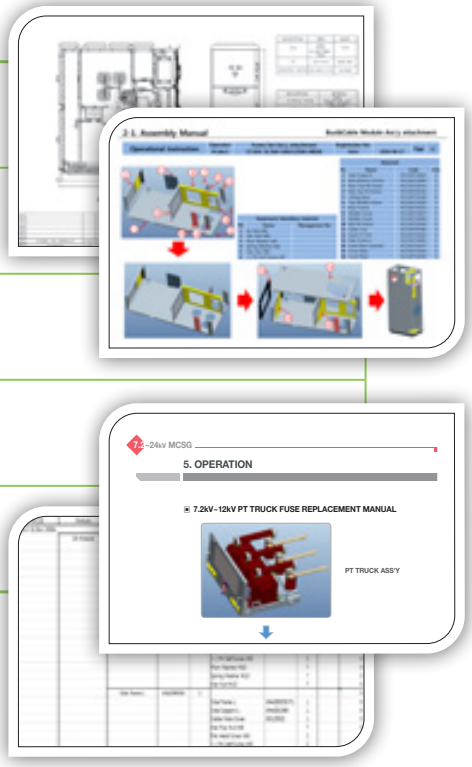

Support services

Consulting services and technical assistance are provided according to the stage of business.

Technical documentation
- Design drawings
- Assembly guide / manual
- Operation & maintenance

Production training & support
- Technical training
- Assembly training
- Inspection training

Test certificates

Technical, assembly and inspection training

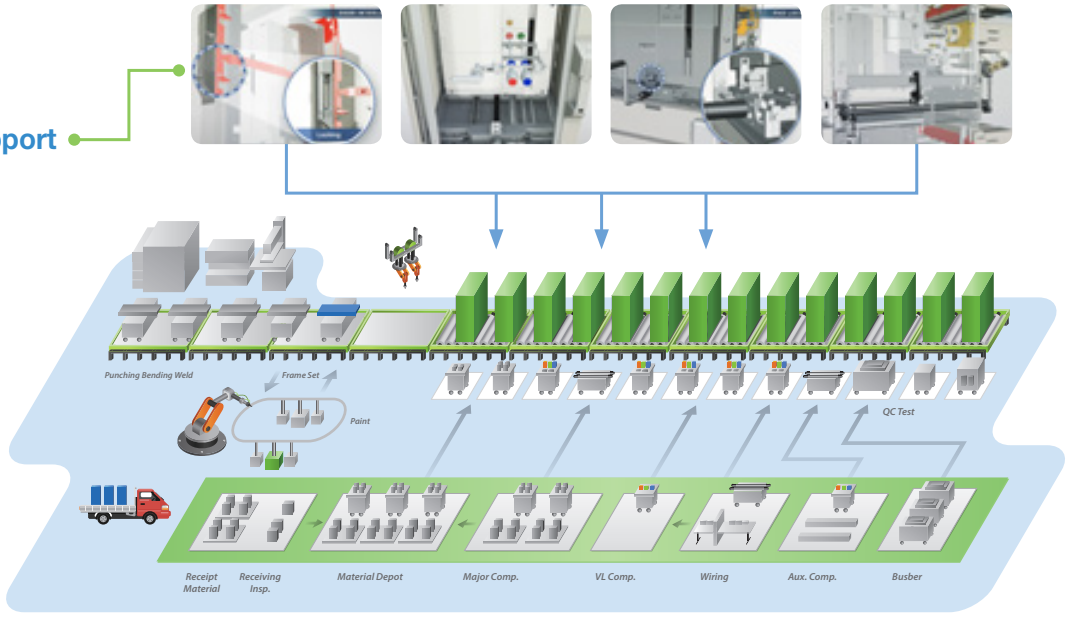

Technical documentation
- Design drawings
- Assembly guide / manual
- Operation & maintenance

Production training & support
- Technical training
- Assembly training
- Inspection training

Test certificates

MV test cell

▶ **Function**

The site for testing medium-voltage circuit-breakers, switches, metal enclosed switchgear, transformers and power fuses

▶ **Testing capability: Short-circuit test**

3 ph, 7.2 kV, 63 kA 3 ph, 25.8 kV, 25 kA 3 ph, 38 kV, 16 kA

▶ **Certificates**

FUTURING SMART ENERGY

We open up a brighter future through
efficient and convenient energy solutions.

Safety Instructions

- For your safety, please read user's manual thoroughly before operating.
- Contact the nearest authorized service facility for examination, repair, or adjustment.
- Please contact qualified service technician when you need maintenance.
  Do not disassemble or repair by yourself!
- Any maintenance and inspection shall be performed by the personnel having expertise concerned.

LS ELECTRIC

www.lselectric.co.kr/USA

■ **LS ELECTRIC America Inc. Chicago Head Office**
980 Woodlands Parkway, Vernon Hills, IL 60061 USA
Tel: 1-800-891-2941 E-Mail: sales.us@lselectricamerica.com

■ **Headquarter**
127 LS-ro (Hogye-dong) Dongan-gu, Anyang-si, Gyeonggi-Do, 14119, Korea

■ **Seoul Office**
LS Yongsan Tower, 92, Hangang-daero, Yongsan-gu, Seoul, 04386, Korea
Tel. 82-2-2034-4256, 4651, 4909

■ **Overseas Subsidiaries**

- **LS ELECTRIC Japan Co., Ltd. (Tokyo, Japan)**
  Tel: 81-3-6268-8241 E-Mail: jschuna@lselectric.biz
- **LS ELECTRIC (Dalian) Co., Ltd. (Dalian, China)**
  Tel: 86-411-8730-5872 E-Mail: jiheo@lselectric.com.cn
- **LS ELECTRIC (Wuxi) Co., Ltd. (Wuxi, China)**
  Tel: 86-510-6851-6666 E-Mail: jdyim@lselectric.com.cn
- **LS ELECTRIC Vietnam Co., Ltd.**
  Tel: 84-93-631-4099 E-Mail: jhchoi4@lselectric.biz (Hanoi)
  Tel: 84-24-3823-7890 E-Mail: sjbaik@lselectric.biz (Hochiminh)
- **LS ELECTRIC Middle East FZE (Dubai, U.A.E.)**
  Tel: 971-4-886-5360 E-Mail: hschoib@lselectric.biz
- **LS ELECTRIC Europe B.V. (Hoofddorf, Netherlands)**
  Tel: 31-20-654-1424 E-Mail: europartner@lselectric.biz

■ **Overseas Branches**

- **LS ELECTRIC Tokyo Office (Japan)**
  Tel: 81-3-6268-8241 E-Mail: jschuna@lselectric.biz
- **LS ELECTRIC Beijing Office (China)**
  Tel: 86-10-5095-1631 E-Mail: chendm@lselectric.com.cn
- **LS ELECTRIC Shanghai Office (China)**
  Tel: 86-21-5237-9977 E-Mail: khpaek@lselectric.com.cn
- **LS ELECTRIC Guangzhou Office (China)**
  Tel: 86-20-3818-2883 E-Mail: chenxs@lselectric.com.cn
- **LS ELECTRIC Chengdu Office (China)**
  Tel: 86-28-8670-3201 E-Mail: yangcf@lselectric.com.cn
- **LS ELECTRIC Qingdao Office (China)**
  Tel: 86-532-8501-2065 E-Mail: wangzy@lselectric.com.cn
- **LS ELECTRIC Nanjing Office (China)**
  Tel: 86-25-8467-0005 E-Mail: ylong@lselectric.com.cn
- **LS ELECTRIC Bangkok Office (Thailand)**
  Tel: 66-90-950-9683 E-Mail: sjleet@lselectric.biz
- **LS ELECTRIC Jakarta Office (Indonesia)**
  Tel: 62-21-2933-7614 E-Mail: yjleee@lselectric.biz
- **LS ELECTRIC Moscow Office (Russia)**
  Tel: 7-499-682-6130 E-Mail: jdpark1@lselectric.biz
- **LS ELECTRIC America Western Office (Irvine, USA)**
  Tel: 1-949-333-3140 E-Mail: jwyun@lselectricamerica.com

Technical Question or After-sales Service

Customer Center-Quick Responsive Service, Excellent technical support | **82-1644-5481**

2020. 04

Specifications in this catalog are subject to change without notice due to continuous product development and improvement.

©2016. 4 LS ELECTRIC Co., Ltd. All rights reserved. / English (04) 2020. 07 Staffcom