Derwent
Top 100
Global
Innovator
2020

EV Relay

Technical Data

Leading Solution
for Advanced Electric Vehicle

LS ELECTRIC

Safety is LS first priority!

With the G7 EV national project, LS has established a proven track record of providing our customers with quality hybrid/electric solutions since 1993. With over 30 years of experience in electric power and automation solutions, we provide quality hybrid/electric vehicle components. LS partners with our customers to design advanced EV solutions that enable them to bring next-generation products to the market with innovative technology.

What is LS EV- Relay?

The main function of LS EV-Relay is stable supply of electric power and cut-off. This prevents the failure of blocking the short time short-circuit current of capacitor, motor or the wiring. And it has the function of protecting the automotive electronics from reverse regeneration current generated when a sudden stop happens.

Features

Compact Design
Achieved overall compact size with short gap cutoff, charged with hydrogen and nitrogen gas.

Proven Safety
High short-time short circuit current withstand value.

Superior Reliability
Excellent performance with electrical and mechanical endurances.

Customizable
Relays are customizable to meet customers requirements such as mounting position, etc.

Warranty

LS warrants that the products shall be free from defects in material and workmanship for a period of twelve (12) months from the manufacturing date of the products. If any defect due to LS' failure, the extent of LS' liability under this warranty shall be limited to, at LS option, the repair, replacement.
LS' obligation regarding to this warranty is conditioned upon the submission to LS of a written service request which specifies the defect and the relevant evidence within seven (7) days from the date recognizing thw defect.

Notwithstanding the foregoing, the warranty above shall not apply, if the products have been subjected to misuse, abuse, negligence, improper installation, improper maintenance, improper transportation, accident, alteration or design change by anyone other than LS, or if the original name, serial number and/or identification marking have been defaced, altered or removed, or the products haven used in violation of instructions furnished by LS.

Under any circumstance, LS shall not have any other obligations, guaranties, conditions or liabilities, express or implied arising by law or otherwise (including, without limitation, any obligation of LS with respect to consequential damages) and whether or not occasioned by LS' negligence, than the above statement and shall not be extended, altered or varied.

Applications

High DC voltage applications such as

- Electric Vehicle & Hybrid Vehicle
- Renewable Energy Storage
- Fuel Cell & Solar System
- General-purpose Industrial Equipment
- Battery Charging System

Model Number Structure

GER □□□-ST □□□□□□□□

❶ ❷ ❸ ❹ ❺ ❻ ❼ ❽

❶ Interrupting Current

010	10A	100	100A
020	20A	150	150A
040	40A	200	200A
060	60A	250	250A
080	80A	400	400A

❷ Cutoff Voltage

A | 450V

❸ Control Voltage

A | 12V
B | 24V

❹ Break Contact Type

S | Screw
P | Plug

❺ Control Contact Type

P | Plug
C | Connector

❻ Reserved Area

❼ Type / Kind

A | General
B | Side Mounting

❽ Version

Precautions

Safety Precautions

Specification Range
Use that exceeds the specification ranges such as the coil rating, contact rating and switching life should be avoided. Doing so may lead to abnormal heating, smoke, and fire.

Installation, Maintenance
Never touch live parts when power is applied to a relay. Doing so may cause electrical shock. When installing, maintaining, or trouble shooting, the power of relays and connecting parts such as terminals and sockets must be turned off.

Connection
Be warned that an incorrect connection may lead to unexpected operation error, abnormal heating, and fire.

Fail-Safe
If the possibility exists that faulty adhesion or contact could endanger assets or human life, take double safety precautions and make sure that operation is foolproof.

Right Connection of HV Terminal
GER-Relays' contacts have polarity. Make sure to perform connections with the correct polarity as indicated on the frame. If the contacts are connected with the reverse polarity, the switching characteristics specified in this document cannot be assured.

Conductor size for HV connection

Model	Recommendation
GER010	2mm^2
GER040	10mm^2
GER100	35mm^2
GER150	50mm^2
GER250	100mm^2
GER400	150mm^2

Recommended Bolt Type for Relays


(Hex Bolt)

Usage Ambient Condition

To maintain initial performance, do not drop or apply physical impact to the relay.

Under normal use, the relay is designed not to be detached. To maintain initial performance, the case should not be disassembled. Relay characteristics cannot be guaranteed if the case is removed.

Magnetism
If relays are proximately installed next to each other or installed near highly-magnetized parts such as motor or speaker, the operational characteristics might get changed or malfunction can happen. Hence, please verify this point in actual installation and operational condition.

Shock
It is ideal to mount the relay that the movement of the contacts and movable parts is perpendicular to the direction of the vibration or shock. Especially, note that the vibration and shock resistance of NC contacts while the coil is not excited is greatly affected by the mounting direction of the relay. Condensation could be formed when there is a sudden change in temperature under high temperature, high humidity conditions. Note that condensation may cause deterioration of the insulation, breaking of coil, and rusting.

Storage, Transportation

Transportation
Relay's functional damage may occur if strong vibration, shock or heavy weight is applied to a relay during transportation of a device in which a relay is installed. Therefore, please pack them in a way, using shock-absorbing material, so that the allowable range for vibration and shock is not exceeded.

Storage
If the relay is stored for extended periods of time (including transportation period) at high temperatures or high humidity levels or in atmospheres with organic gas or sulfide gas, sulfide film or oxide film may be formed on surface of the contacts, which may cause contact instability, contact failure and functional failure. Please check the atmosphere in which the units are to be stored and transported.

Configuration Circuit

System and Function

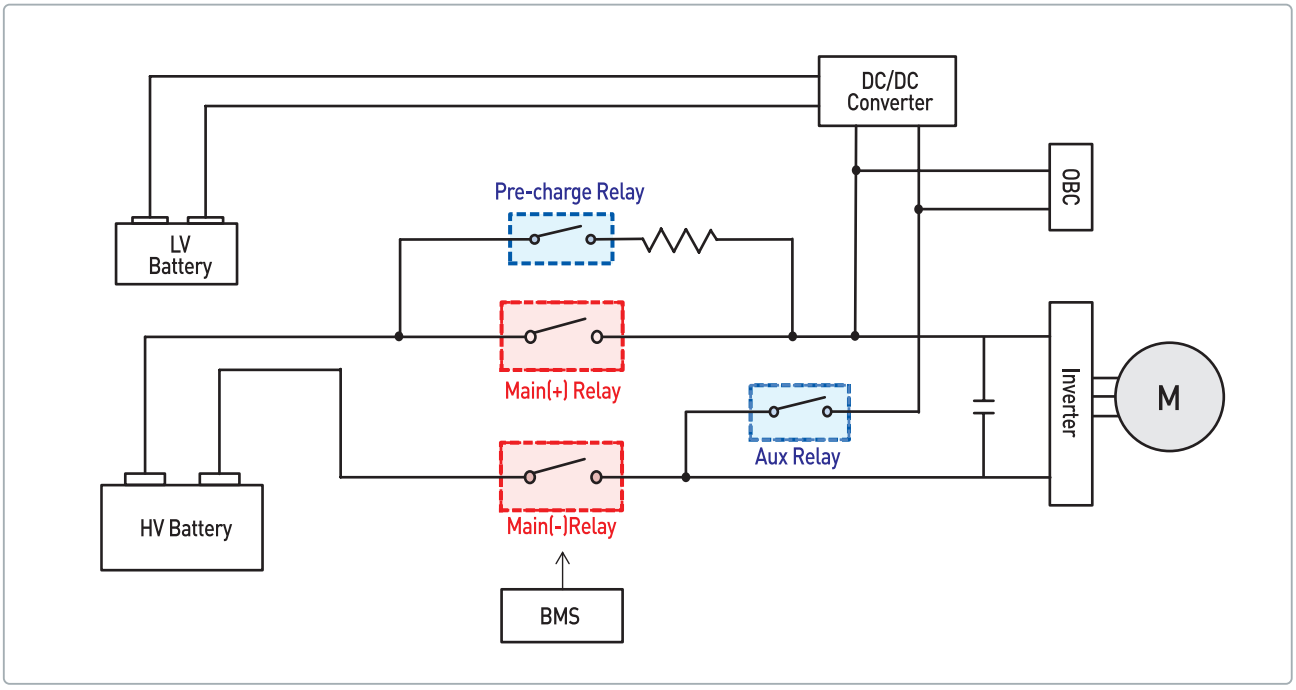

Operating Sequence of EV-Relay

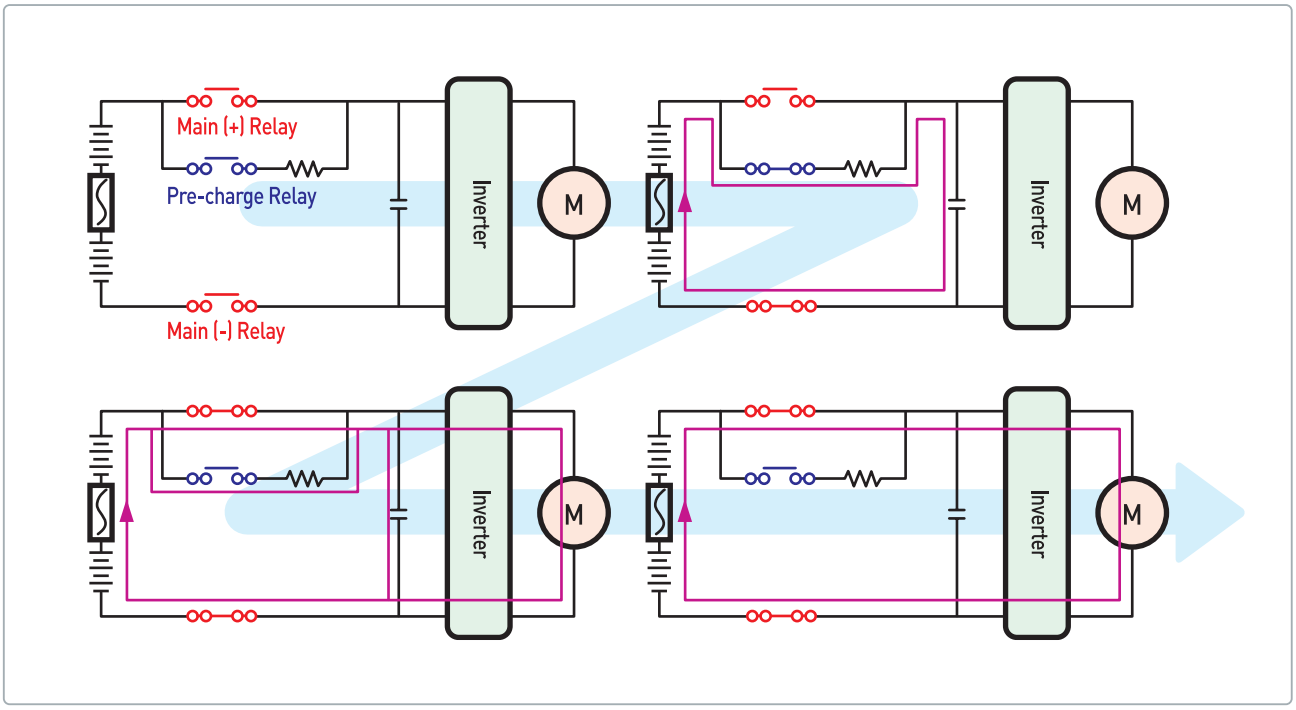

Specifications Standard Type



Model			GER010	GER020	GER040
Width x Height x Depth(mm)			56×45×28	56×45×28	67×47×35
Characteristics	Item		Specifications		
Contact	Contact Form		SPST-NO		
	Contact Structure		Double Break, Single		
	Contact Voltage Drop (initial)		0.02V at 20A	0.5V at 10A	0.2V at 20A
	Short-time Current (Over Current)		10A (continuously, 2mm²)	20A (continuously 2.5mm²)	40A (continuously, 10mm²)
			15A (2min., 2mm²)	30A (2min 2.5mm²)	60A (15min., 10mm²)
			30A (30sec., 2mm²)	40A (15min 2.5mm²)	100A (2min., 10mm²)
	Max. Cut-off Current		N / A	N / A	400A at 450VDC (1cycle)
	Reverse Direction Cut-off		N / A	N / A	-40A 200VDC (1,000 cycles at 20 CPM)
	Switch-off Life		N / A	N / A	120A 450VDC (100 cycles)
Coil	Rated Voltage		12VDC	12VDC	12VDC, 24VDC
	Pick-up Voltage (at 20℃)		Max. 9VDC	Max. 9VDC	Max. 9VDC, 18VDC
	Drop-out Voltage (at 20℃)		Min. 1.2VDC	Min. 1.2VDC	Min. 1.2VDC, 2.4VDC
	Coil Resistance (at 20℃)		60.8Ω	60.8Ω	49.3Ω, 205Ω
	Max Power consumption		3.0W (at 12VDC)	3.0W (at 12VDC)	3.5W (at 12VDC)
	Max. Allowable Voltage		16VDC	16VDC	16VDC, 32VDC
Electrical Characteristics	Operating Time (at 20℃)		Max. 50ms	Max. 50ms	Max. 50ms
	Release Time (at 20℃)		Max. 30ms	Max. 30ms	Max. 30ms
	Insulation Resistance (Initial)	Between Coil and Contacts	Min. 1,000MΩ(at 500VDC)		
		Between Contacts of the Same Polarity			
	Dielectric Strength (Initial)	Between Coil and Contacts	2,200Vrms/sec (Detection Current: 10mA)	2,500Vrms /min. (Detection Current:10mA)	
		Between Contacts of the Same Polarity			
Mechanical Characteristics	Shock Resistance	Functional	196m/s²(20G) [Relay On: 11ms half sine, 10μs detection time]		
		Destructive	490m/s2(50G) [Relay On: 9ms half sine wave]		
	Vibration Resistance	Functional	10 to 1,000Hz at 1.0G [Detection Time: 10μs, Time of vibration for each X,Y,Z direction: 8 hours]		
		Destructive	10 to 200Hz in increments of 10 at min. 4.5G [Time of vibration for each X, Y, Z direction: 4 hours]		
Expected Life	Mechanical		Min. 150,000ops (at 60CPM)	Min. 150,000ops (at 60CPM)	Min. 200,000ops (at 60CPM)
	Electrical(Resistive Load)		10A, 450VDC 150,000cycles (at 6CPM) (Only making)	10A, 450VDC 150,000cycles (at 6CPM) (Only making)	40A, 450VDC, 1,000cycles (at20CPM)
			N / A	N / A	N / A
			N / A	N / A	N / A
Ambient Operating Temp.			-40 ~ 85℃		
Ambient Operating Humidity			5 ~ 95%R.H.		
Tightening Torque	Mounting EV Relay		(M4): 1.8 to 2.7 N·m	(M4): 1.8 to 2.7 N·m	(M4): 1.8 to 2.7 N·m
	Main Terminal		N / A	N / A	[M4]: 1.5 to 2.0N·m
Weight (g)			85	85	144
Option			N / A	N / A	N / A

	GER100	GER150	GER200	GER250	GER400
	81×70×39	81×70×39	81×70×39	92×87×45	100×91×58
	Specifications				
	SPST-NO				
	Double Break, Single				
	0.04V at 20A	0.02V at 20A	0.02V at 20A	0.02V at 20A	0.02V at 20A
	100A (continuously, 35mm²)	150A (continuously, 50mm²)	200A (contrnuously 50mm²)	250A (continuously, 100mm²)	400A (continuously, 150mm²)
	150A (15min., 35mm²)	225A (15min., 50mm²)	300A (2min 50mm²)	350A (15min., 100mm²)	600A (7min., 150mm²)
	225A (2min., 35mm²)	320A (2min., 50mm²)	400A (500sec 50mm²)	500A (2min., 100mm²)	800A (2min., 150mm²)
	1,000A at 450VDC (1cycle)	1,500A at 450VDC (1cycle)	1,500A at 450VDC (1cycle)	2,500A at 400VDC (1cycle)	3,200A at 450VDC (1cycle)
	-100A 200VDC (1,000 cycles at 20 CPM)	-150A 200VDC (500 cycles at 20 CPM)	-150A 200VDC (500 cycles at 20 CPM)	-250A 200VDC (1,000 cycles at 6 CPM)	-400A 200VDC (1,000 cycles at 1 CPM)
	200A 450VDC (100 cycles)	300A 450VDC (100 cycles at 1 CPM)	300A 450VDC (100 cycles at 1 CPM)	400A 450VDC (100 cycles at 1 CPM)	800A 450VDC [200 cycles at 1 CPM]
	12VDC	12VDC	12VDC	12VDC, 24VDC	12VDC, 24VDC
	Max. 9VDC	Max. 9VDC	Max. 8VDC	Max. 9VDC, 18VDC	Max. 9VDC, 16VDC
	Min. 1.2VDC	Min. 1.2VDC	Min. 1.2VDC	Min. 1.2VDC, 2.4VDC	Min. 1.2VDC, 2.4VDC
	33Ω	23.5Ω	23.5Ω	38.9Ω, 157Ω	38.2Ω, 152.8Ω
	6.5W (at 12VDC)	6.5W (at 12VDC)	6.5W (at 12VDC)	4W (*inrush current: 2.9/1.25A for 12/24V)	4.5W (*inrush current: 4.2/2.1A for 12/24V)
	16VDC	16VDC	16VDC	16VDC, 32VDC	16VDC, 32VDC
	Max. 50ms	Max. 50ms	Max. 50ms	Max. 30ms	Max. 30ms
	Max. 30ms	Max. 30ms	Max. 30ms	Max. 10ms	Max. 10ms
	Min. 1,000MΩ (at 500VDC)				
	2,500Vrms /min. (Detection Current :10mA)				
	196m/s²(20G) [Relay On: 11ms half sine, 10μs detection time]				
	490m/s2(50G) [Relay On: 9ms half sine wave]				
	10 to 1,000Hz at 1.0G [Detection Time: 10μs, Time of vibration for each X,Y,Z direction: 8 hours]				
	10 to 200Hz in increments of 10 at min. 4.5G [Time of vibration for each X, Y, Z direction: 4 hours]				
	Min. 200,000ops (at 60CPM)	Min. 200,000ops (at 60CPM)	Min. 200,000ops (at 60CPM)	Min. 200,000ops (at 60CPM)	Min. 200,000ops (at 60CPM)
	100A, 450VDC, 1,000ops. (at 20CPM)	150A, 450VDC, 1,000ops. (at 20CPM)	200A 450V 1,000ops (at 6cpm)	250A, 450VDC, 1,000ops. (at 6CPM)	400A, 450VDC, 1,000ops. (at 6CPM)
	40A, 450VDC, 20,000ops. (at 20CPM)	15A, 450VDC, 50,000ops. (at 20CPM)	240A 50V 75,000ops (at 6cpm)	100A, 450VDC, 10,000ops. (at 6CPM)	200A, 450VDC, 3,000ops. (at 12CPM)
	N / A	N / A	N / A	N / A	N / A
	-40 ~ 85℃				
	5 ~ 95%R.H.				
	(M5): 3 to 4 N·m	(M5): 3 to 4 N·m	(M5): 3 to 4 N·m	(M6): 6 to 8 N·m	(M6): 6 to 8 N·m
	[M6]: 3.5 to 4.5N·m	[M6]: 3.5 to 4.5N·m	[M6]: 3.5 to 4.5N·m	(M6): 4 to 4.5 N·m	(M6): 6 to 8 N·m
	326	326	326	492	622
	N / A	BUS BAR Type, Side Mounting Type	BUS BAR Type, Side Mounting Type	N/A	N/A

Specifications Plug-in Type



Model			20A	60A	80A
Width x Height x Depth (mm)			40 ×30 ×32	50 ×52.2 ×40	64.45 ×68.7 ×41.9
Characteristics	Item		-	-	-
Contact	Contact Form		SPST-NO(1a)	SPST-NO(1a)	SPST-NO(1a)
	Contact Structure		Double Break, Single	Double Break, Single	Double Break, Single
	Contact Voltage Drop (initial)		0.5V (at 10A)	0.04V (at 20A)	0.04V (at 20A), 0.16V (at 80A)
	Short-time Current (Over Current)		15A (2min, 2mm²)	55A (continuously, 15mm²)	120A (15min, 15mm²)
			30A (30sec, 2mm²)	100A (2min, 15mm²)	180A (2min, 15mm²)
	Max. Cut-off Current		-	-	-
	Reverse Direction Cut-off		-	-	-
	Switch-off Life		-	-	-
Coil	Rated Voltage		12V		
	Pick-up Voltage (at 20℃)		Max. 9VDC		
	Drop-out Voltage (at 20℃)		Min. 1.2VDC	Min. 1.2VDC	Min. 1.2VDC
	Coil Resistance (at 20℃)		60 Ω	32 Ω	33 Ω
	Power Consumption		2.5W	4.5W	4.5W
	Max. Allowable Voltage		16VDC		
Electrical Characteristics	Operating Time (at 20℃)		Max. 50ms		
	Release Time (at 20℃)		Max. 30ms		
	Insulation Resistance (Initial)	Between Coil and Contacts	Min. 100M Ω (at 500VDC)		
		Between Contacts of the Same Polarity			
	Dielectric Strength (Initial)	Between Coil and Contacts	2,500Vrms/min (Detection Current: 10mA)		
		Between Contacts of the Same Polarity			
Mechanical Characteristics	Shock Resistance	Functional	10~2000Hz, Random Profile (12hrs each direction)		1. Impact acceleration & Pulse width : peak 20gn, 11ms. 2. Test wave form: half sine 3. Mounting angle & Number of tests : X, Y, Z-axis, each 3 times
		Destructive			1. Impact acceleration & Pulse width : peak 50gn, 9ms. 2. Test wave form : half sine 3. Mounting angle & Number of tests : X, Y, Z-axis, 3 times for each axis
	Vibration Resistance	Functional	18msec(30G) 3 times for each axis, Total 18 times		1. Frequency : 10 ~ 1,000Hz, 2. Test time : X, Y, Z, 8 hours for each axis
		Destructive	6msec(15G) 200 times for each axis, Total 1200 times		
Expected Life	Mechanical		Min. 200,000ops (at 60CPM)	Min. 250,000ops (at 60CPM)	Min. 200,000ops (at 60CPM)
	Electrical (Resistive Load)		20A, 450VDC, 75,000ops(only Making)	20A, 450VDC, 75,000ops(only Making)	50A, 10VDC, 150,000ops(only Making)
			10A, 270VDC, 150,000ops(only Making)	-	5A, 270VDC, 150,000ops(only Breaking)
			-	-	160A, 270VDC, 200ops(only Breaking)
Ambient Operating Temp.			-40 ~ 85℃	-40 ~ 85℃	-40 ~ 85℃
Ambient Operating Humidity			5-95% R.H.	5-95% R.H.	5-95% R.H.
Tightening Torque	Mounting EV Relay		-	-	-
	Main Terminal		-	-	-
Weight (g)			73	200	350
Option			-	-	-

Selection of Relay Type

For the proper use of a relay, you must not only be well informed of the characteristics of the relay and service conditions to determine whether the selected one fits for the conditions for application, but also fully understand the specifications of coil and contact, operate time, mechanical characteristics, and other conditions for the relay to be used.
Please refer to the table below for details and considerations for selection.

Items		Details	Considerations for Selection
Coil	Pull-in Voltage (Current)	The value at which a relay should function when increasing the voltage to an unoperated relay	-Select a relay by considering a power supply ripple -Specifically take into account ambient temperature, coil temperature, and hot start -Be careful with the voltage drop when using the relay in conjunction with semiconductors -Be careful with the voltage drop when starting up
	Drop-out Voltage (Current)	The value at which a relay should revert to the unoperated state when decreasing the voltage to an operated relay	
	Maximum Continuous Voltage	The maximum allowable voltage to be continuously applied to the coil without causing damage. Short duration spikes of a higher voltage can be tolerated, but you must consult with the manufacturer above all.	
	Coil Resistance	The DC resistance of the coil of DC type relays	
	Temperature Rise	If power is supplied to coil, the coil's temperature is increased and saturated. Temperature rise refers to the difference between the temperatures before and after the power application to the coil	
Contact	Contact Rating	The allowable rated voltage and current in EV relay	-Note that the life of relay is balanced with that of the device in which the relay is embedded. -If often exposed to high temperature, the rated life of the relay may be reduced. It is required to test the life in an actual environment. -Test and review need to be performed with actual load and application under an actual environment.
	Contact Material	Material that forms contacts	
	Life	The minimum number of times a relay can be operated under the normal condition while contacts are switching specific load	
	Contact Resistance	The value combined together the resistance produced when contacts touch each other, that of terminals, and that of contact spring	
Operate Time	Operate Time	The time elapsed since power is first supplied to the coil until the open contacts are normally closed, excluding bounce time	-Note that the operate time and bounce time may be changed according to the ambient temperature and applied voltage. -Note that bounce time is not excluded from both operate time and release time. -Note that switching life is affected by switching frequency.
	Release Time	The time elapsed since power is cut off from the coil until the normally closed contacts are reclosed, excluding bounce time	
	Bounce Time	The phenomenon that contacts intermittently switches on and off as movable parts and contacts are collided	
	Switching Frequency	The frequency of switching that repeats operations while satisfying the electrical life or mechanical life through the application of a pulse train to the operating coil at the rated voltage	
Mechanical Characteristics	Vibration Resistance	1) Functional : The vibration tolerated by a relay during the operation without making the contacts open for over the specified time 2) The vibration the relay can endure in the process of shipment, installation or use without causing damage and change in the operating characteristics of the relay	-Consider the performance of a relay during the service with vibration and shock -Check the allowable ambient temperature of the relay.
	Shock Resistance	1) Functional : The acceleration tolerated by a relay during the operation without making the contacts open for over the specified time 2) Destructive : The acceleration a relay can endure in the process of shipment or installation without causing damage and change in the operating characteristics of the relay	
	Ambient Use Temperature	The allowable temperature of the environment in which EV relay is mounted.	
	Life	The minimum number of times a relay can be operated under the normal condition without load on the contacts	
Other Items	Breakdown Voltage (Dielectric Strength)	The maximum voltage tolerated by a relay without causing damage for a specific period, which is measured at the same points as insulation resistance	-Select among plug-in type, soldering type, screw-fastening type, and printed circuit board type to be used for connection -Select PCB mounting methods including soldering and cleaning to be used for protection -Select sealed construction type to be used in an adverse environment
	Mounting, Connection	Mounting : Parallel type and vertical type Connection : Screw type and plug-in type used to connect to main circuit	
	Size	Size of EV relay (Width, Height, Depth)	

GER010

Pre-charge Only Purpose

Coil Terminal Accessory

Main Terminal	Coil Terminal	Accessory(Not included)
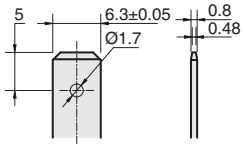	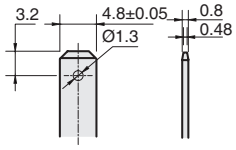	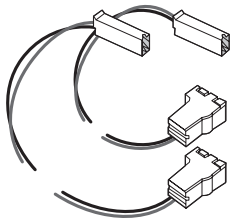
Pin Type Features: • Terminal Type = Tab • Mating Area Interface • Dimensions (mm) 6.3×0.80 • Material = Brass **Applicable Connector :** • Terminal Type = Receptacle • Tyco 63445-2	**Pin Type Features:** • Terminal Type = Tab • Mating Area Interface • Dimensions (mm) 4.8×0.80 • Material = Brass **Applicable Connector :** • Terminal Type = Receptacle • Tyco 5-160429-1 61945-1	**Components** Main Terminal accessory : 2EA Coil Terminal accessory : 2EA Wire length : 300mm

Dimensions

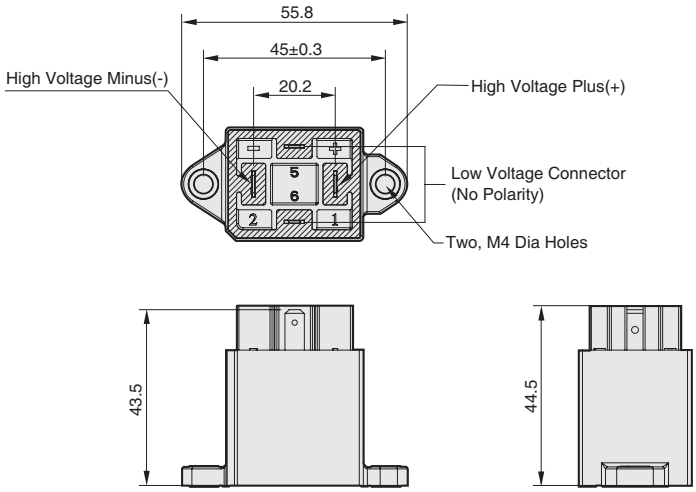

General Tolerance

Less Than 10: ±0.25 / 10~50: ±0.5
More Than 50: ±0.8

Engineering Data

Operating Voltage Characteristics	Current Distribution
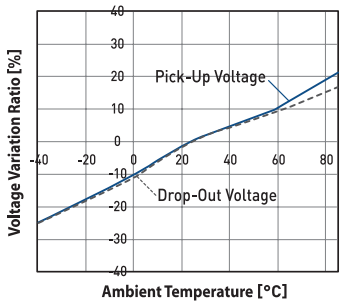	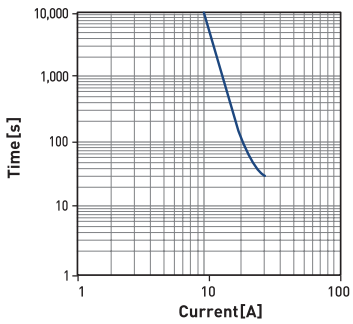

Note : I-T curve at ambient temperature of 23℃
※ The graph above is estimate, so please use it only for your reference.

GER020

Pre-charge Only Purpose

Coil Terminal Accessory

Main Terminal	Coil Terminal	Accessory(Not included)
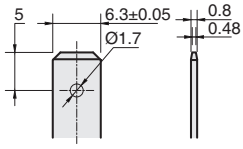	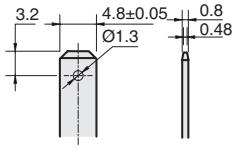	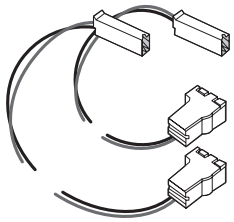
Pin Type Features: • Terminal Type = Tab • Mating Area Interface • Dimensions (mm) 6.3×0.80 • Material = Brass **Applicable Connector :** • Terminal Type = Receptacle • Tyco 63445-2	**Pin Type Features:** • Terminal Type = Tab • Mating Area Interface • Dimensions (mm) 4.8×0.80 • Material = Brass **Applicable Connector :** • Terminal Type = Receptacle • Tyco 5-160429-1 61945-1	**Components** Main Terminal accessory : 2EA Coil Terminal accessory : 2EA Wire length : 300mm

Dimensions

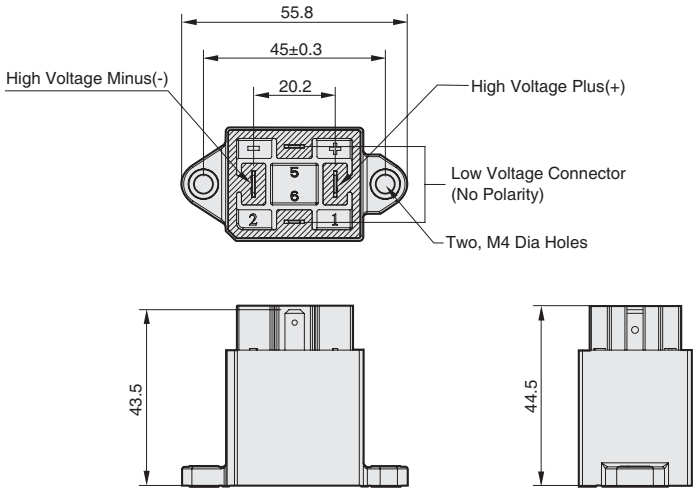

General Tolerance

Less Than 10: ±0.25 / 10~50: ±0.5
More Than 50: ±0.8

Engineering Data

Operating Voltage Characteristics	Current Distribution
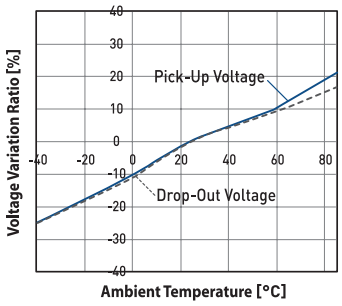	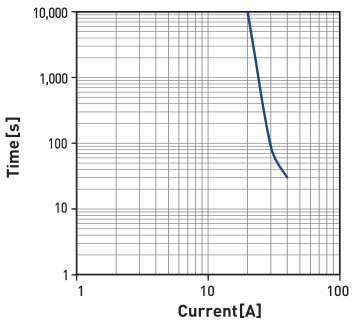

Note : I-T curve at ambient temperature of 23℃
※ The graph above is estimate, so please use it only for your reference.

GER040

Pre-charge, Charger, AUX Multi Purpose

Coil Terminal Accessory

Housing : 1379658-1	Terminal : 1123343-1	Accessory(Not included)
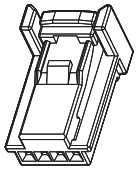		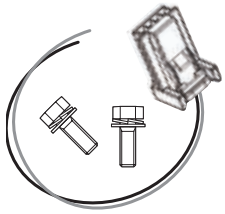
• Connector Style = Receptacle • Contact Type = Tab • Receptacle Configuration =025	• Contact Type = Receptacle • Applies To Wire/Cable • Wire/Cable Type = Discrete Wire • Wire Range = 0.20-0.602 [24-20] mm [AWG]	**Components** Coil Terminal Accessory : 1EA Flange Bolt M4-4 2EA Wire length : 300mm

Dimensions

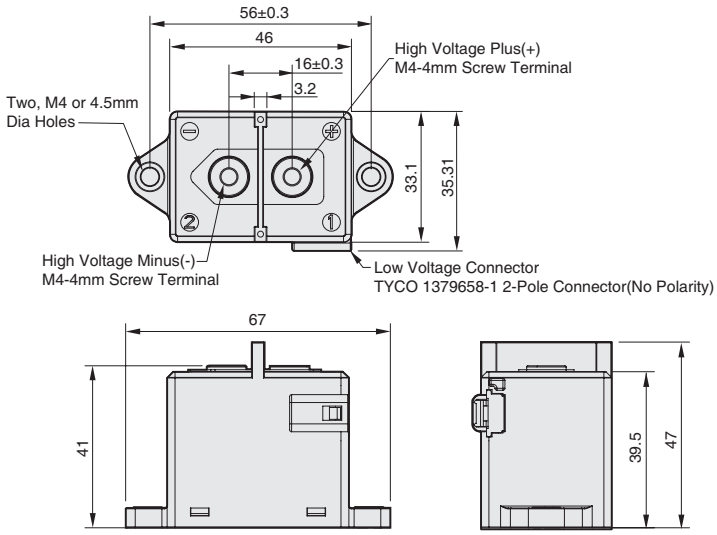

General Tolerance

Less Than 10: ±0.25 / 10~50: ±0.5
More Than 50: ±0.8

Engineering Data

Operating Voltage Characteristics	Current Distribution	Switching Life Curve (450V)
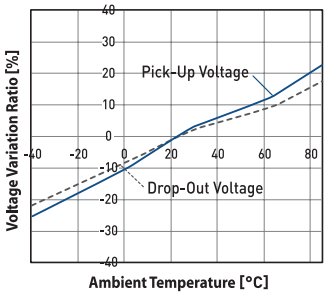	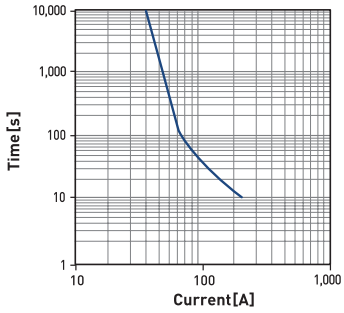	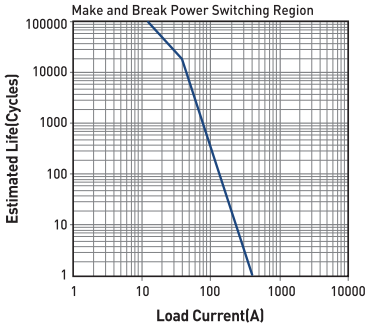

Note : I-T curve at ambient temperature of 23℃
※ The graph above is estimate, so please use it only for your reference.

GER100

Main, Charger, AUX Multi Purpose

Coil Terminal Accessory

Housing:MG651026(L)	Terminal:ST730676-3	Accessory(Not included)

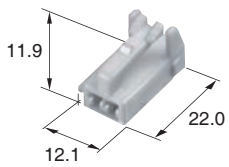

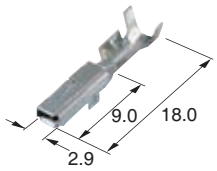

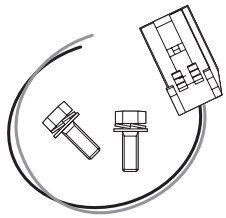

Part No.	Wire Range		Tab Thick	Material	
	AWG	mm²		Thick	Finish
ST730676-3	18-16	AVSS(CAVS) 0.85~1.25	0.64	0.25	Copper Alloy Pre-Tin

Components
Coil Terminal Accessory : 1EA
Flange Bolt M6-7 2EA
Wire length : 300mm

Dimensions

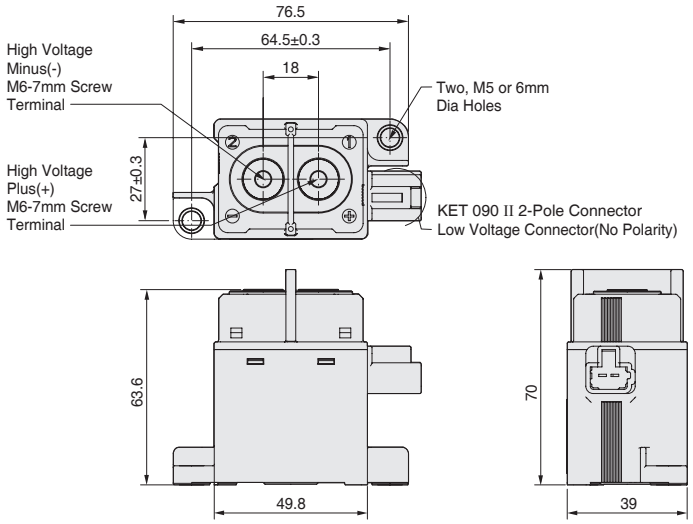

General Tolerance
Less Than 10: ±0.25 / 10~50: ±0.5
More Than 50: ±0.8

Engineering Data

Operating Voltage Characteristics	Current Distribution	Switching Life Curve

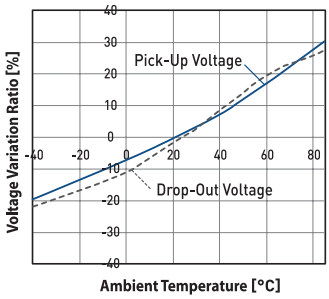

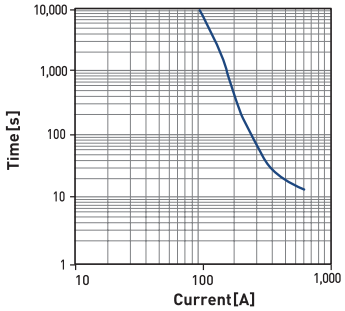

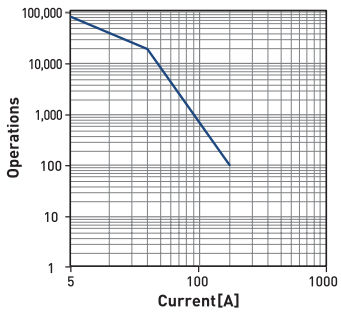

Note : I-T curve at ambient temperature of 23℃
※ The graph above is estimate, so please use it only for your reference.

GER150

Main, Charger Multi Purpose

Coil Terminal Accessory

Housing : MG651026(L)	Terminal : ST730676-3	Accessory(Not included)

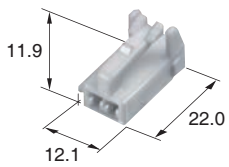

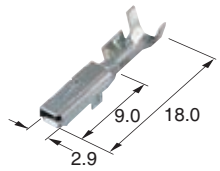

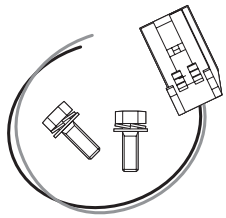

Part No.	Wire Range		Tab Thick	Material	
	AWG	mm²		Thick	Finish
ST730676-3	18-16	AVSS(CAVS) 0.85~1.25	0.64	0.25	Copper Alloy Pre-Tin

Components
Coil Terminal Accessory : 1EA
Flange Bolt M6-7 2EA
Wire length : 300mm

Dimensions

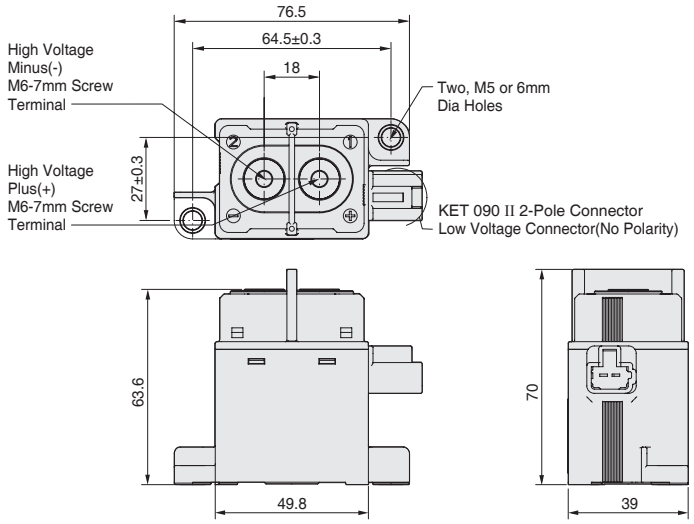

General Tolerance
Less Than 10: ±0.3 / 10~50: ±0.5
More Than 50: ±0.8

Engineering Data

Operating Voltage Characteristics	Current Distribution	Switching Life Curve

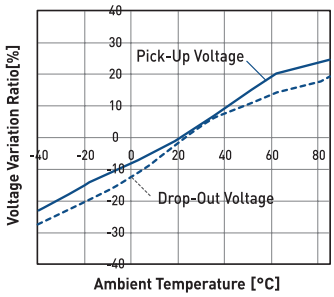

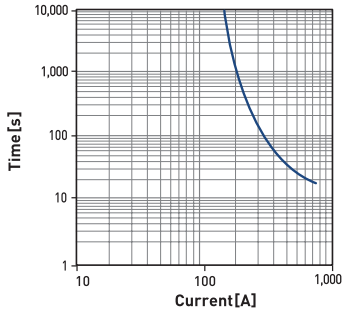

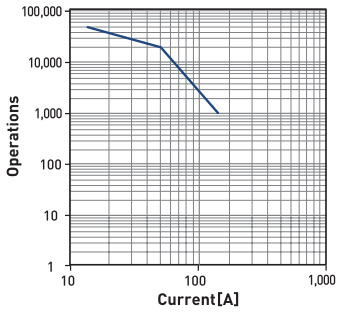

Note : I-T curve at ambient temperature of 23℃
※ The graph above is estimate, so please use it only for your reference.

GER150

Main, Charger Multi Purpose

Side Mounting Type

Advantage of Side Mounting Type :

It can lower the overall height if the height of BDU is limited.

Dimensions

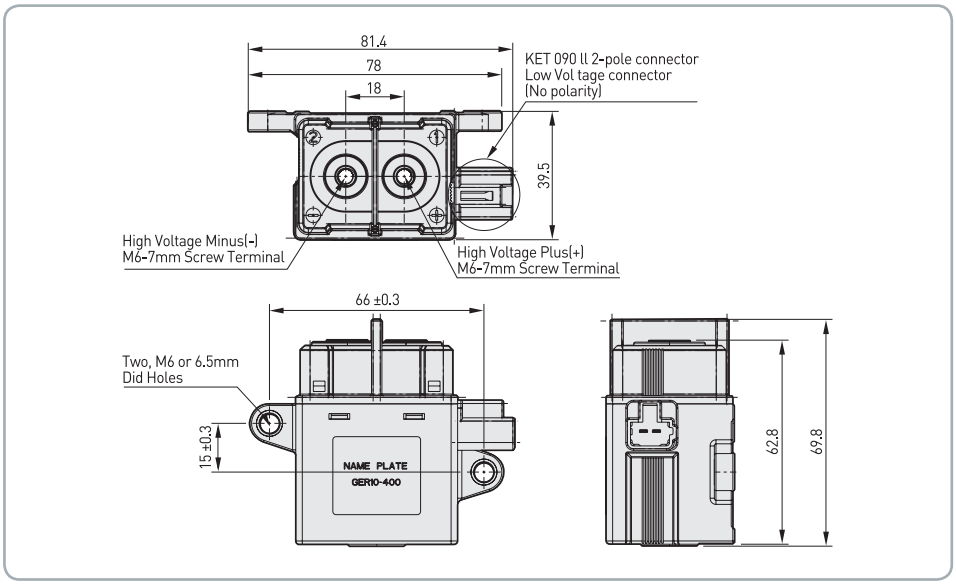

GER200

Main, Charger Multi Purpose

Coil Terminal Accessory

Housing : MG651026(L)	Terminal : ST730676-3	Accessory(Not included)

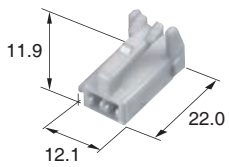

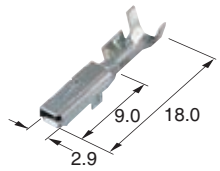

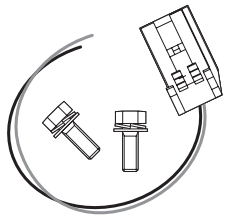

Part No.	Wire Range		Tab Thick	Material	
	AWG	mm²		Thick	Finish
ST730676-3	18-16	AVSS(CAVS) 0.85~1.25	0.64	0.25	Copper Alloy Pre-Tin

Components
Coil Terminal Accessory : 1EA
Flange Bolt M6-7 2EA
Wire length : 300mm

Dimensions

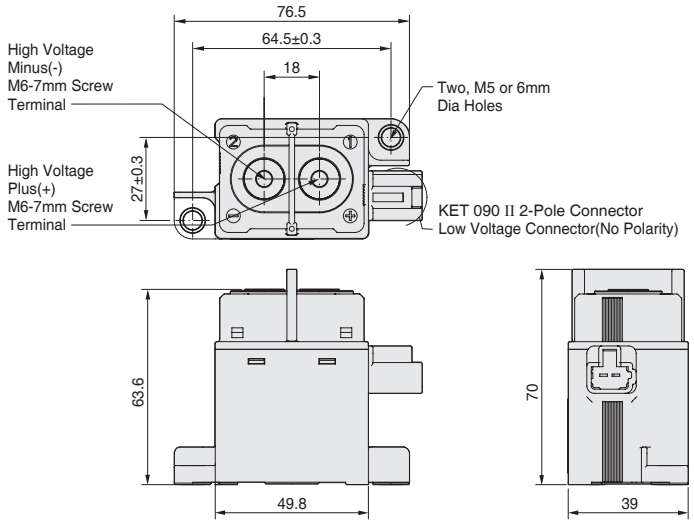

General Tolerance
Less Than 10: ±0.3 / 10~50: ±0.5
More Than 50: ±0.8

Engineering Data

Operating Voltage Characteristics	Current Distribution	Switching Life Curve

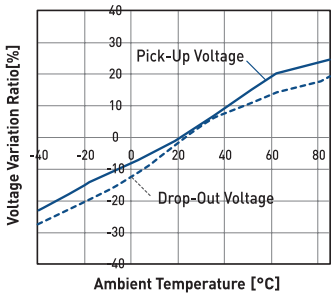

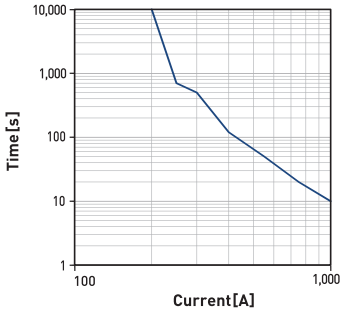

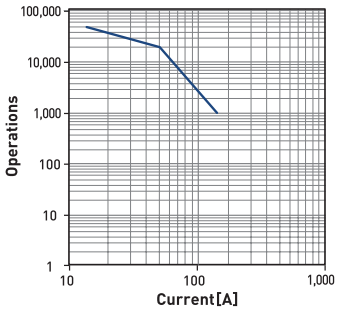

Note : I-T curve at ambient temperature of 23℃
※ The graph above is estimate, so please use it only for your reference.

GER250

Main, Charger Multi Purpose

Coil Terminal Accessory

Housing : MG651026(L)	Terminal : ST730676-3	Accessory(Not included)

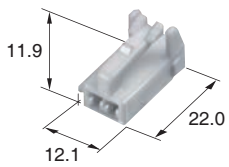

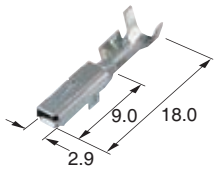

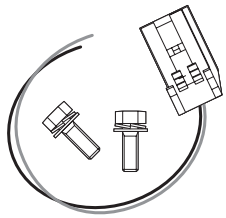

Part No.	Wire Range		Tab Thick	Material	
	AWG	mm²		Thick	Finish
ST730676-3	18-16	AVSS(CAVS) 0.85~1.25	0.64	0.25	Copper Alloy Pre-Tin

Components
Coil Terminal Accessory : 1EA
Flange Bolt M6-9 2EA
Wire length : 300mm

Dimensions

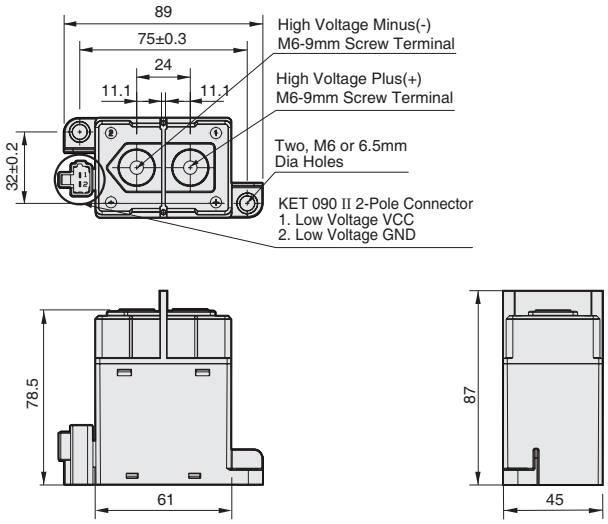

General Tolerance
Less Than 10: ±0.3 / 10~50: ±0.5
More Than 50: ±0.8

Engineering Data

Operating Voltage Characteristics	Current Distribution	Switching Life Curve (450V)

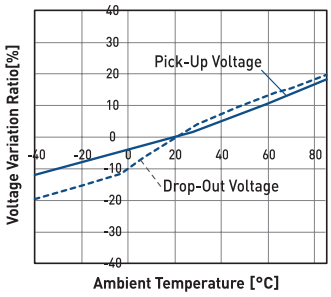

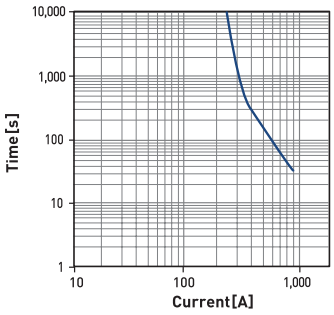

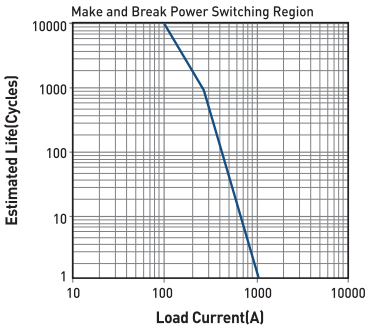

Note : I-T curve at ambient temperature of 23℃
※ The graph above is estimate, so please use it only for your reference.

GER400

Main, Charger Multi Purpose

Coil Terminal Accessory

Housing : MG651026(L)	Terminal : ST730676-3	Accessory(Not included)

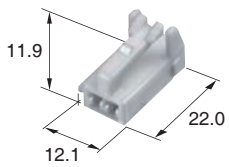

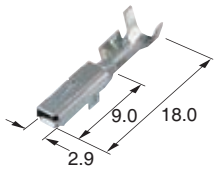

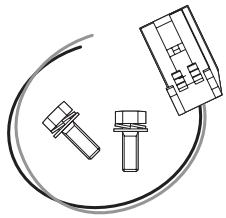

Part No.	Wire Range		Tab Thick	Material	
	AWG	mm²		Thick	Finish
ST730676-3	18-16	AVSS(CAVS) 0.85~1.25	0.64	0.25	Copper Alloy Pre-Tin

Components
Coil Terminal Accessory : 1EA
Flange Bolt M6-9 2EA
Wire length : 300mm

Dimensions

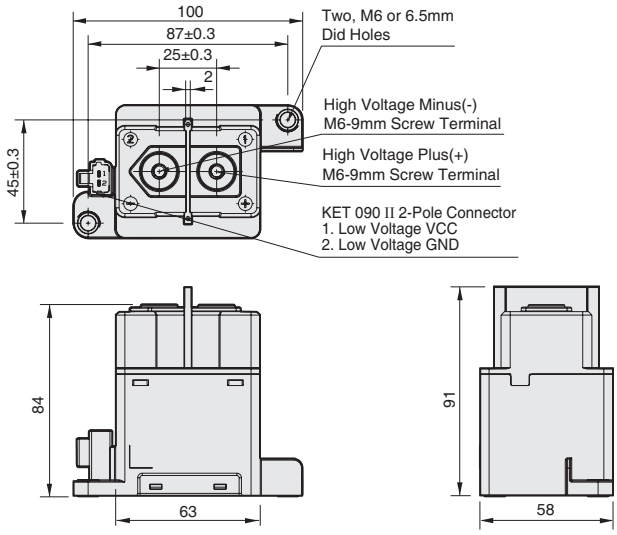

General Tolerance
Less Than 10: ±0.25 / 10~50: ±0.5
More Than 50: ±0.8

Engineering Data

Operating Voltage Characteristics	Current Distribution	Switching Life Curve (450V)

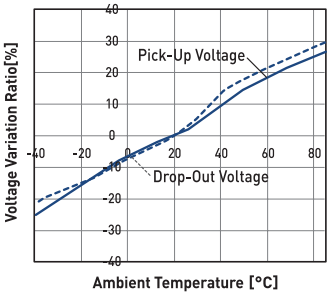

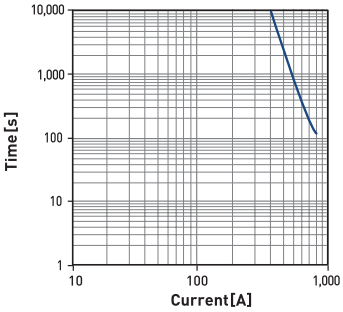

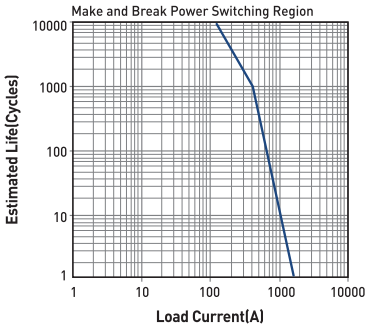

Note : I-T curve at ambient temperature of 23℃
※ The graph above is estimate, so please use it only for your reference.

GER020 Plug-in

Dimensions

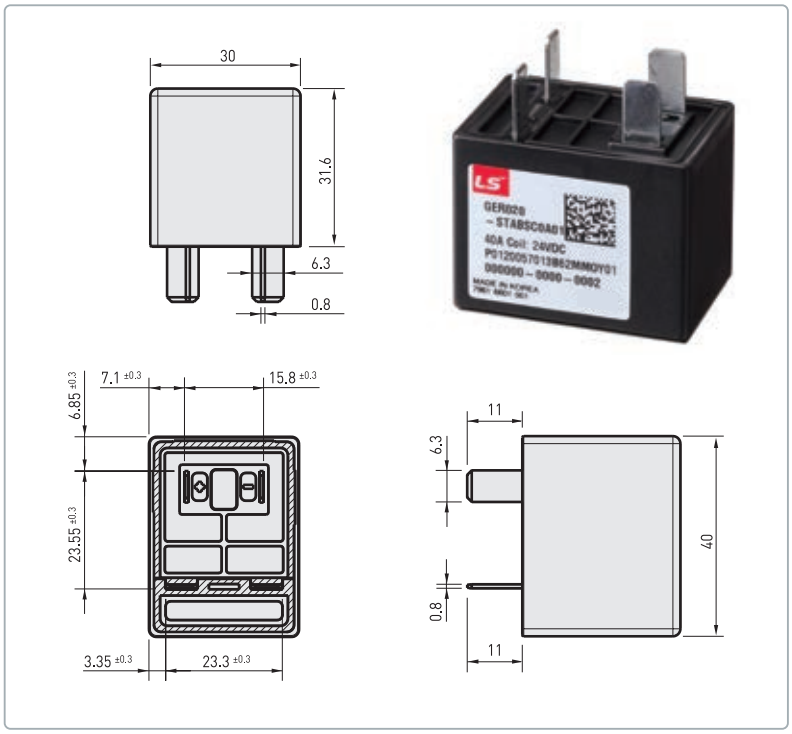

Terminal

HV terminal

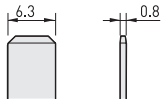

Pin Type Features:
- Terminal Type = Tab
- Mating Area Interface
- Dimensions (mm) 6.3x 0.80
- Material = Brass

Applicable Connector:
- Terminal Type = Receptacle
- Tyco 63445-2

LV terminal

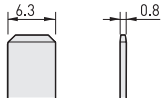

Pin Type Features:
- Terminal Type = Tab
- Mating Area Interface
- Dimensions (mm) 4.8 X 0.80
- Material = Brass

Applicable Connector:
- Terminal Type = Receptacle
- Tyco 61945-1(0.8t)
- Tyco 1217149-(0.5t)

General Tolerance

Less Than 10 : ±0.25 / 10~50 : ±0.5
More Than 50 : ±0.8

※ Please make inquiries when the Engineering Data is needed.

GER060 Plug-in

Dimensions

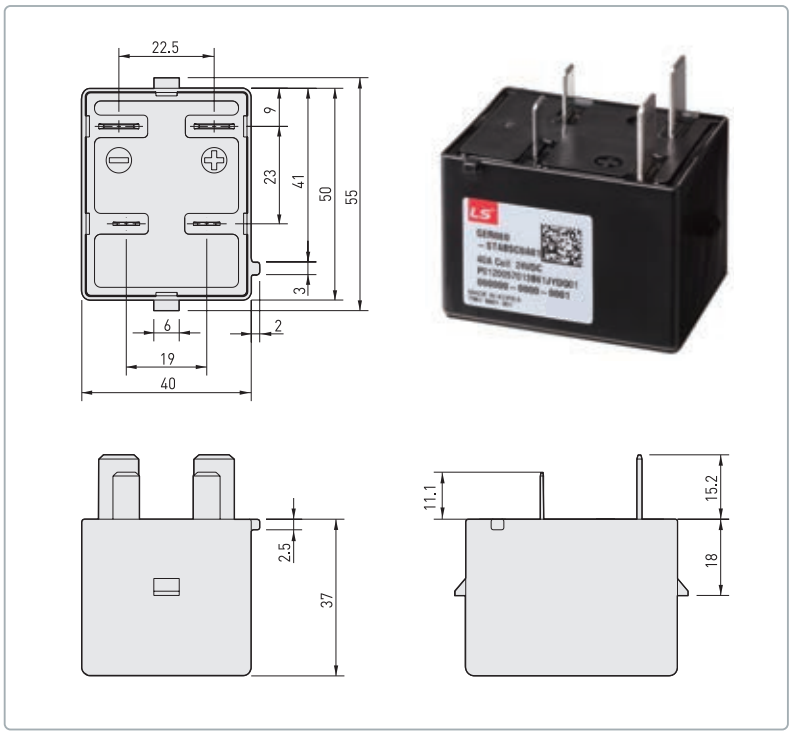

Terminal

HV terminal

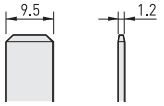

Pin Type Features:
- Terminal Type = Tab
- Mating Area Interface
- Dimensions (mm) 6.3x 0.80
- Material = Brass

Applicable Connector:
- Terminal Type = Receptacle
- Tyco 63445-2

LV terminal

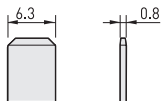

Pin Type Features:
- Terminal Type = Tab
- Mating Area Interface
- Dimensions (mm) 4.8 X 0.80
- Material = Brass

Applicable Connector:
- Terminal Type = Receptacle
- Tyco 61945-1(0.8t)
- Tyco 1217149-(0.5t)

General Tolerance

Less Than 10 : ±0.25 / 10~50 : ±0.5
More Than 50 : ±0.8

※ Please make inquiries when the Engineering Data is needed.

GER080 Plug-in

Dimensions

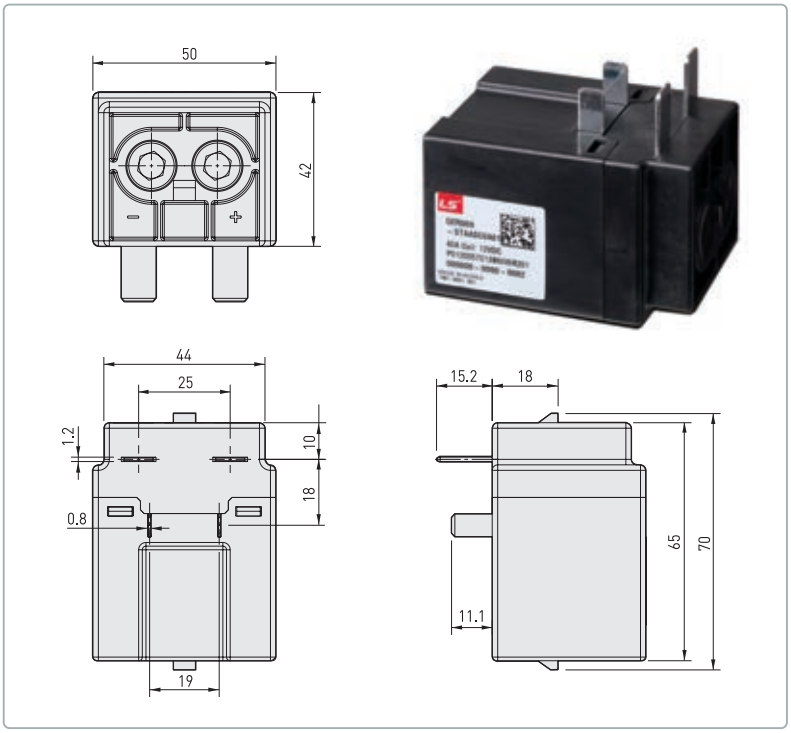

Terminal

HV terminal

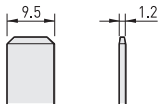

Pin Type Features:
- Terminal Type = Tab
- Mating Area Interface
- Dimensions (mm) 6.3x 0.80
- Material = Brass

Applicable Connector:
- Terminal Type = Receptacle
- Tyco 1-967589-2

LV terminal

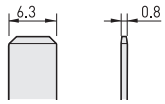

Pin Type Features:
- Terminal Type = Tab
- Mating Area Interface
- Dimensions (mm) 4.8 X 0.80
- Material = Brass

Applicable Connector:
- Terminal Type = Receptacle
- Tyco 61945-1(0.8t)
- Tyco 1217149-(0.5t)

General Tolerance

Less Than 10 : ±0.25 / 10~50 : ±0.5
More Than 50 : ±0.8

※ Please make inquiries when the Engineering Data is needed.

Memo

Memo

FUTURING SMART ENERGY

We open up a brighter future through
efficient and convenient energy solutions.

Safety Instructions

- For your safety, please read user's manual thoroughly before operating.
- Contact the nearest authorized service facility for examination, repair, or adjustment.
- Please contact qualified service technician when you need maintenance.
  Do not disassemble or repair by yourself!
- Any maintenance and inspection shall be performed by the personnel having expertise concerned.

- According to The WEEE Directive, please do not discard the device with your household waste.

LS ELECTRIC

www.ls-electric.com

■ Headquarter
127 LS-ro (Hogye-dong) Dongan-gu, Anyang-si, Gyeonggi-Do, 14119, Korea

■ Seoul Office
LS Yongsan Tower, 92, Hangang-daero, Yongsan-gu, Seoul, 04386, Korea
Tel. 82-2-2034-4916, 4684, 4429

■ Overseas Subsidiaries
- LS ELECTRIC Japan Co., Ltd. (Tokyo, Japan)
  Tel: 81-3-6268-8241 E-Mail: japan@ls-electric.com
- LS ELECTRIC (Dalian) Co., Ltd. (Dalian, China)
  Tel: 86-411-8730-5872 E-Mail: china.dalian@lselectric.com.cn
- LS ELECTRIC (Wuxi) Co., Ltd. (Wuxi, China)
  Tel: 86-510-6851-6666 E-Mail: china.wuxi@lselectric.com.cn
- LS ELECTRIC Vietnam Co., Ltd. (Hanoi, Vietnam)
  Tel: 84-222-2221-110 E-Mail: vietnam@ls-electric.com
- LS ELECTRIC Middle East FZE (Dubai, U.A.E.)
  Tel: 971-4-886-5360 E-Mail: middleeast@ls-electric.com
- LS ELECTRIC Europe B.V. (Hoofddorp, Netherlands)
  Tel: 31-20-654-1424 E-Mail: europartner@ls-electric.com
- LS ELECTRIC America Inc. (Chicago, USA)
  Tel: 1-800-891-2941 E-Mail: sales.us@lselectricamerica.com
- LS ENERGY SOLUTIONS LLC (Charlotte, USA)
  Tel: 1-704-587-4051 E-Mail: cmfeldman@ls-es.com
- LS ELECTRIC Türkiye Co., Ltd. (Istanbul, Türkiye)
  Tel: 90-212-806-1252 E-Mail: turkiye@ls-electric.com
- LS ELECTRIC IBERIA S.L.U. (Madrid, Spain)
  Tel: 34-910-28-02-74 E-Mail: iberia@ls-electric.com

■ Overseas Branches
- LS ELECTRIC Tokyo Office (Japan)
  Tel: 81-3-6268-8241 E-Mail: tokyo@ls-electric.com
- LS ELECTRIC Beijing Office (China)
  Tel: 86-10-5095-1631 E-Mail: china@lselectric.com.cn
- LS ELECTRIC Shanghai Office (China)
  Tel: 86-21-5237-9977 E-Mail: china@lselectric.com.cn
- LS ELECTRIC Guangzhou Office (China)
  Tel: 86-20-3818-2883 E-Mail: china@lselectric.com.cn
- LS ELECTRIC Chengdu Office (China)
  Tel: 86-28-8670-3201 E-Mail: china@lselectric.com.cn
- LS ELECTRIC Qingdao Office (China)
  Tel: 86-532-8501-2065 E-Mail: china@lselectric.com.cn
- LS ELECTRIC Nanjing Office (China)
  Tel: 86-25-8467-0005 E-Mail: china@lselectric.com.cn
- LS ELECTRIC Bangkok Office (Thailand)
  Tel: 66-90-950-9683 E-Mail: thailand@ls-electric.com
- LS ELECTRIC Jakarta Office (Indonesia)
  Tel: 62-21-2933-7614 E-Mail: indonesia@ls-electric.com
- LS ELECTRIC Moscow Office (Russia)
  Tel: 7-499-682-6130 E-Mail: info@lselectric-ru.com
- LS ELECTRIC America Western Office (Irvine, USA)
  Tel: 1-949-333-3140 E-Mail: america@ls-electric.com
- LS ELECTRIC India Office (India)
  Tel: 91-80-6142-9108 E-Mail: Info_india@ls-electric.com
- LS ELECTRIC Singapore Office (Singapore)
  Tel: 65-6958-8162 E-Mail: singapore@ls-electric.com
- LS ELECTRIC Italy Office (Italy)
  Tel: 39-030-8081-833 E-Mail: italia@ls-electric.com

2022. 12

Specifications in this catalog are subject to change without notice due to continuous product development and improvement.