Beyond™

Metasol MC/TOR

Contactors and Overload Relays

LS ELECTRIC

Metasol Contactors and Overload Relays

Next Generation Contactors from LS Electric

Designed with superior technology: Metasol series

The product's sealed structure improves its safety features, ensuring no arc flash is exposed. To emphasize durability as an industrial device, the Metasol series incorporates a simple design form and heavy-duty shape applying diamond cut concepts on the product's surface.

Table of Contents

Specifications table 10
Type numbering system 20
Environment 22
Connections 23
Control coil characteristics 24
Marking 28
Internal structure 29
Contactors 30
Motor starters 54
Reversing contactors 58
LED voltage monitoring contactor 60
Contactor relays 61
Latching contactors 64
4-pole contactors 68
Enclosed motor starters, Mold enclosure 80
Enclosed motor starters, Steel enclosure 81
Capacitor contactors 82
2-pole AC contactors, Definite purpose 83
3-pole AC contactors, Definite purpose 84
Single-pole AC contactors, Definite purpose 85
2-pole DC contactors 86
Accessory 87
Overload relays 98
- Overload relay specifications 100
- Overload relay operation 104
- Accessories for overload relay 105
- Overload relay ordering types 110
- Overload relay trip curves 116

Type 2 coordination (440V) 124
Rated UL 508 combination motor controller Type-C 131
Rated UL 508 combination motor controller Type-D 135
Rated UL 508 combination motor controller Type-F 138
Ready for IE3 141
Dimension 142
Delayed opening device 179
Electronic timer unit 180
Contact arrangement 181
Comparison table 184
Certifications 190

Metasol Series completion

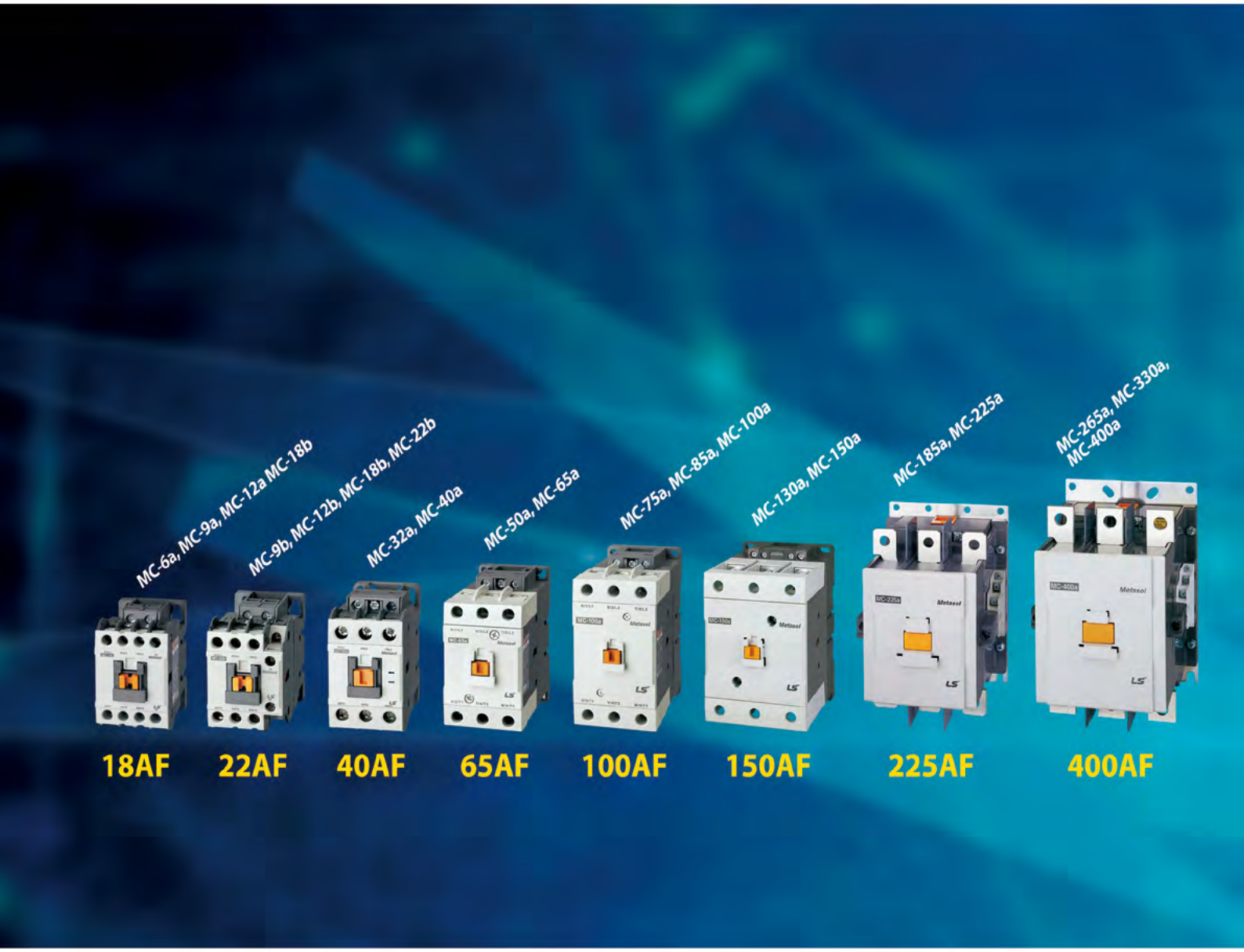

Safer, More Valuable

Contactors & Overload Relays

- *Advanced technology with expert solutions*
- *Offering economical solutions with compact size and easy connection*
- *Ensure reliability in the system: Type II Coordination*
- *Perfect system with peripheral devices*
- *Environmentally friendly products:*
  Complies with International Environment Standard RoHS
- *25 Models in 9 Frames*
- *IE3 ready*

Contactors and overload relays

Motor Starters

- *Compact, space-saving design*
- *DIN rail and screw mounting (up to 150AF)*
- *Overload relays directly mountable to contactors separately*
- *Finger-proof design*
- *Easy to combine with manual motor starters*
- *Broad range of accessories*
- *World class products conforming to IEC and UL standards*

18AF	22AF	40AF	65AF	100AF	150AF
Contactor	**Contactor**	**Contactor**	**Contactor**	**Contactor**	**Contactor**
MC-6a, 9a, 12a, 18a	**MC-9b, 12b, 18b, 22b**	**MC-32a, 40a**	**MC-50a, 65a**	**MC-75a, 85a, 100a**	**MC-130a, 150a**
Rated current: 6, 9, 12, 18A	Rated current: 9, 12, 18, 22A	Rated current: 32, 40A	Rated current: 50, 65A	Rated current: 75, 85, 100A	Rated current: 130, 150A
Rated insulation voltage: 690V	Rated insulation voltage: 690V	Rated insulation voltage: 1000V	Rated insulation voltage: 1000V	Rated insulation voltage: 1000V	Rated insulation voltage: 1000V
Overload relay MT-12	**Overload relay MT-32**	**Overload relay MT-32**	**Overload relay MT-63**	**Overload relay MT-95**	**Overload relay MT-150**
Current range: 0.1~18A	Current range: 0.1~40A	Current range: 0.1~40A	Current range: 4~65A	Current range: 7~100A	Current range: 34~150A
Trip class: Class 10A, 20	Trip class: Class 10A, 20	Trip class: Class 10A, 20	Trip class: Class 10A, 20	Trip class: Class 10A, 20	Trip class: Class 10A, 20

225AF

Contactor
MC-185a, 225a
Rated current:
185, 225A
Rated insulation voltage:
1000V
Overload relay MT-225
Current range: 65~240A
Trip class: Class 10A, 20

400AF

Contactor
MC-265a, 330a, 400a
Rated current:
265, 330, 400A
Rated insulation voltage:
1000V
Overload relay MT-400
Current range: 85~400A
Trip class: Class 10A, 20

800AF

Contactor
MC-500a, 630a, 800a
Rated current:
500, 630, 800A
Rated insulation voltage:
1000V
Overload relay MT-800
Current range: 200~800A
Trip class: Class 10A, 20

1260AF

Contactor
MC-1260a
Rated current:
1260A
Rated insulation voltage:
1000V

2650AF

Contactor
MC-1400a, 1700a, 2100a, 2650a
Rated current:
1400, 1700, 2100, 2650A
Rated insulation voltage:
1000V

MC/TOR
Accessories

Perfect combination of peripheral devices and various accessories

Offering economical solution with compact size & easy connection

Compatible with other devices and accessories

■ One-touch connection
- Din rail connection without any special tools
- Directly combine a surge unit

■ Simple wiring
- Mounting unit, adapter
- Reversing wire set

■ Easy maintenance
- 4-terminal type for operation coil wiring
- Module type screw terminal
- Interlock unit with built-in auxiliary contacts (2 NO)

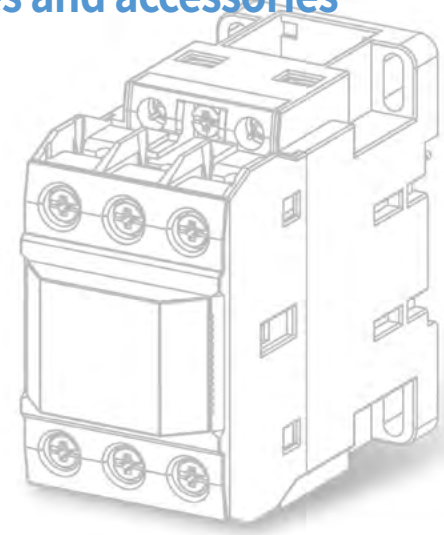

Advanced accessories for Metasol contactors

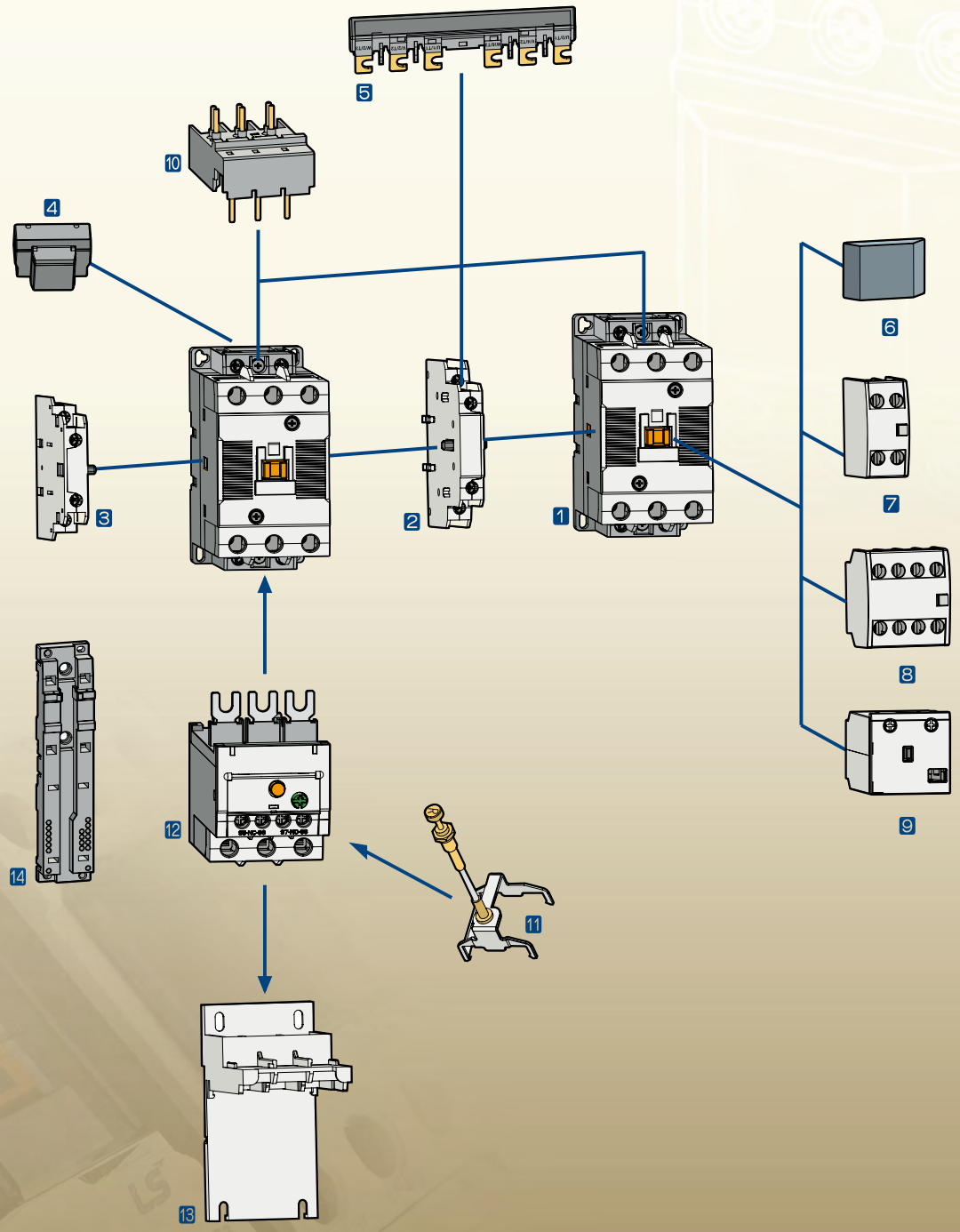

1 Contactor
2 Interlock unit
3 Auxiliary contact unit
- side mount
4 Surge unit
5 Wire kit
6 Safety cover (Option)
7 Auxiliary contact unit
- front mount (2p)
8 Auxiliary contact unit
- front mount (4p)
9 Mechanical latch unit
10 Direct adaptor to MMS
11 Remote reset unit
12 Overload relay
13 Separate mounting unit
14 Mounting unit for use with MMS

Specification table

MC type
Magnetic Contactors

Frame size				18AF				22AF			
Type				MC-6a	MC-9a	MC-12a	MC-18a	MC-9b	MC-12b	MC-18b	MC-22b
	Screws clamp terminals			●	●	●	●	●	●	●	●
	Lug clamp terminals										
Number of poles				3pole				3pole			
Rated operational voltage (Ue)				690V				690V			
Rated insulation voltage (Ui)				690V				690V			
Rated frequency				50/60Hz				50/60Hz			
Rated impulse withstand voltage, Uimp				6kV				6kV			
Maximum operating rate in operating cycles per hour (AC3)				1800 operations per hour				1800 operations per hour			
Durability	Mechanical			15 mil. operations				15 mil. operations			
	Electrical			2.5 mil. operations				2.5 mil. operations			
Current power	AC-1, Thermal current		[A]	25	25	25	32	25	27	40	45
	AC-3	200/240V	[kW]	2.2	2.5	3.5	4.5	2.5	3.5	4.5	5.5
			[A]	9	11	13	18	11	13	18	22
		380/440V	[kW]	3	4	5.5	7.5	4	5.5	7.5	11
			[A]	7	9	12	18	9	12	18	22
		500/550V	[kW]	3	4	7.5	7.5	4	7.5	7.5	15
			[A]	6	7	12	13	7	12	13	20
		690V	[kW]	3	4	7.5	7.5	4	7.5	7.5	15
			[A]	4	5	9	9	6	9	9	18
		1000V	[kW]	-	-	-	-	-	-	-	-
			[A]	-	-	-	-	-	-	-	-
Rated Short-time withstand current (IEC 60947)		1s	[A]	210	250	280	300	250	280	300	400
		10s	[A]	105	110	120	130	110	120	154	186
		30s	[A]	70	70	80	85	70	80	100	130
		1min	[A]	61	61	61	70	61	61	84	90
		3min	[A]	40	45	47	50	45	50	60	60
		10min	[A]	30	30	30	40	30	30	40	50
		≥15min	[A]	25	26	28	30	26	28	30	45
UL rating (50/60Hz)	Continuous current		[A]	25	25	25	32	25	25	40	40
	Single phase	110~120V	[HP]	0.5	0.5	1	2	0.5	1	2	2
		220~240V	[HP]	1.5	1.5	2	3	1.5	2	3	3
	Three phase	200~208V	[HP]	2	2	3	7.5	2	3	7.5	7.5
		220~240V	[HP]	3	3	5	7.5	3	5	7.5	10
		440~480V	[HP]	5	5	7.5	10	5	7.5	10	15
		550~600V	[HP]	7.5	7.5	10	15	7.5	10	15	20
	NEMA size			00	00	0	1	00	0	1	
Size and weight	AC control	Weight	[kg]	0.33				0.34			
		Size (W×H×D)	[mm]	45×73.5×80.4				45×73.5×87.4			
	DC control	Weight	[kg]	0.4				0.41			
		Size (W×H×D)	[mm]	45×73.5×96.6				45×73.5×103.6			
Auxiliary(Standard)				1a or 1b				1a1b			
Auxiliary	Side mount			UA-1				UA-1			
	Front mount			UA-2, UA-4				UA-2, UA-4			

Note: Minimum conducting current of auxiliary contactor is DC 17V 5mA

MT type
Thermal Overload Relays

Type				MT-12/□	MT-32/□
	Screws clamp terminals			●	●
	Lug clamp terminals				
Rated operational voltage, Ue				690V	690V
Rated insulation voltage, Ui				690V	690V
Rated impulse withstand voltage, Uimp				6kV	6kV
Trip class				10A, 20	10A, 20
Setting range				0.1~18A	0.1~40A
Size and weight		Weight	[kg]	0.1	0.17
		Size (W×H×D)	[mm]	45×73.2×63.7	45×75×90

* The safety cover for magnetic contactor and thermal overload relay is optional.

	40AF		65AF		100AF		
	MC-32a	MC-40a	MC-50a	MC-65a	MC-75a	MC-85a	MC-100a
	●	●	●	●	●	●	●
			●	●	●	●	●
	3pole		3pole			3pole	
	1000V		1000V			1000V	
	1000V		1000V			1000V	
	50/60Hz		50/60Hz			50/60Hz	
	8kV		8kV			8kV	
	1800 operations per hour		1200 operations per hour		1200 operations per hour		
	12 mil. operations		12 mil. operations		12 mil. operations		
	2 mil. operations		2 mil. operations		2 mil. operations		1 mil. operations
	55	60	100	115	125	135	160
	7.5	11	15	18.5	22	25	30
	32	40	55	65	75	85	105
	15	18.5	22	30	37	45	55
	32	40	50	65	75	85	105
	18.5	22	30	33	37	45	55
	28	32	43	60	64	75	85
	18.5	22	30	33	37	45	55
	20	23	28	35	42	45	65
	22	22	30	30	37	37	37
	17	17	23	23	28	28	28
	600	700	1000	1050	1100	1200	1320
	260	300	550	700	750	800	900
	160	190	330	380	400	450	500
	100	120	250	270	300	350	400
	70	80	150	200	220	270	270
	55	65	90	120	140	170	180
	50	60	87	96	114	150	160
	50	60	70	100	110	135	160
	3	3	3	5	5	7.5	10
	5	7.5	10	15	15	15	20
	7.5	15	20	25	25	30	30
	10	15	25	30	30	40	40
	20	30	40	50	50	60	75
	25	30	50	60	60	75	75
	1P	2				3	
	0.55		1.05		1.93		
	69×83×90		79×106×119		94×140×135.8		
	0.77		1.3		2.8		
	69×83×117.1		79×106×146.4		94×140×172.3		
	2a2b		2a2b		2a2b		
	UA-1		UA-1		UA-1		
	UA-2, UA-4		UA-2, UA-4		UA-2, UA-4		

	MT-32/□	MT-63/□	MT-95/□
	●	●	●
		●	●
	690V	690V	690V
	690V	690V	690V
	6kV	6kV	6kV
	10A, 20	10A, 20	10A, 20
	0.1~40A	4~65A	7~100A
	0.17	0.31/0.33	0.48/0.5
	45×75×90	55×81×100	70×97×110

Specification table

MC type
Magnetic Contactors

Frame size				150AF		225AF		400AF		
Type				MC-130a	MC-150a	MC-185a	MC-225a	MC-265a	MC-330a	MC-400a
	Screws clamp terminals			●	●	●	●	●	●	●
	Lug clamp terminals			●	●	●	●			
Number of poles				3pole		3pole		3pole		
Rated operational voltage (Ue)				1000V		1000V		1000V		
Rated insulation voltage (Ui)				1000V		1000V		1000V		
Rated frequency				50/60Hz		50/60Hz		50/60Hz		
Rated impulse withstand voltage, Uimp				8kV		8kV		8kV		
Maximum operating rate in operating cycles per hour (AC3)				1200 operations per hour		1200 operations per hour		1200 operations per hour		
Durability	Mechanical			5 mil. operations		5 mil. operations		5 mil. operations		2.5 mil. operations
	Electrical			1 mil. operations		1 mil. operations		1 mil. operations		0.5 mil. operations
Current and power	AC-1, Thermal current		[A]	200	250	300	350	400	500	520
	AC-3	200/240V	[kW]	37	45	55	75	80	90	125
			[A]	130	150	185	225	265	330	400
		380/440V	[kW]	60	75	90	132	147	160	200
			[A]	130	150	185	225	265	330	400
		500/550V	[kW]	60	70	110	132	147	160	225
			[A]	90	100	180	200	225	280	350
		690V	[kW]	55	55	110	140	160	200	250
			[A]	60	60	120	150	185	220	300
		1000V	[kW]	75	75	132	132	147	147	147
			[A]	50	50	90	90	105	105	105
Rated Short-time withstand current (IEC 60947)		1s	[A]	1350	1800	2000	2500	3500	4000	4600
		10s	[A]	950	1200	1500	1700	2400	3000	4400
		30s	[A]	700	800	1000	1200	1500	2500	2974
		1min	[A]	550	600	800	1000	1100	1700	1846
		3min	[A]	350	450	520	700	800	1000	1313
		10min	[A]	200	300	350	500	600	620	760
		≥15min	[A]	175	280	320	400	500	553	699
UL rating (50/60Hz)	Continuous current		[A]	200	250	300	350	400	500	520
	Single phase	110~120V	[HP]	10	15	15	15	-	-	-
		220~240V	[HP]	20	25	30	40	-	-	-
	Three phase	200~208V	[HP]	40	40	60	60	75	100	125
		220~240V	[HP]	40	50	60	75	100	100	150
		440~480V	[HP]	75	100	125	150	200	200	300
		550~600V	[HP]	75	75	125	150	200	200	300
	NEMA size				4			5		
Size and weight	AC control	Weight	[kg]	2.4		5.4		9.2		
		Size (W×H×D)	[mm]	119×158×130.3		138×203×185.1		163×243×204.4		
	DC control	Weight	[kg]	2.4		5.4		9.2		
		Size (W×H×D)	[mm]	119×158×130.3		138×203×185.1		163×243×204.4		
Auxiliary (Standard)				2a2b		2a2b		2a2b		
Auxiliary	Side mount			UA-1		AU-100, AU-100E (Max.4a4b)		AU-100, AU-100E (Max.4a4b)		
	Front mount			UA-2, UA-4		-		-		

MT type
Thermal Overload Relays

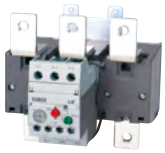

Type			MT150/□	MT225/□	MT400/□
	Screws clamp terminals		●	●	●
	Lug clamp terminals		●	●	
Rated operational voltage, Ue			690V	690V	690V
Rated insulation voltage, Ui			690V	690V	690V
Rated impulse withstand voltage, Uimp			6kV	6kV	6kV
Trip class			10A, 20	10A, 20	10A, 20
Setting range			34~150A	65~240A	85~400A
Size and weight	Weight	[kg]	0.67	2.5	2.6
	Size (W×H×D)	[mm]	95×109×113	147×141×184	151×171×198

* The safety cover for magnetic contactor and thermal overload relay is optional.

	800AF			1260AF	2650AF			
	MC-500a	MC-630a	MC-800a	MC-1260a	MC-1400a	MC-1700a	MC-2100a	MC-2650a
	●	●	●	●	●	●	●	●
	3pole			3pole	3pole			
	1000V			1000V	1000V			
	1000V			1000V	1000V			
	50/60Hz			50/60Hz	50/60Hz			
	8kV			8kV	8kV			
	1200 operations per hour			300 operations per hour	300 operations per hour			
	2.5 mil. operations			0.5 mil. operations	0.5 mil. operations			0.3 mil. operations
	0.5 mil. operations			0.05 mil. operations	0.05 mil. operations			0.02 mil. operations
	700	900	1050	1260	1400	1700	2100	2650
	147	190	220	-	290	310	-	-
	500	630	800	-	860	1050	-	-
	265	330	440	-	550	700	900	-
	500	630	800	-	860	1050	1450	-
	265	330	500	-	-	-	-	-
	400	500	720	-	-	-	-	-
	300	400	500	-	800	1000	-	-
	380	420	630	-	800	950	-	-
	280	280	280	-	-	-	-	-
	220	220	220	-	-	-	-	-
	6000	7000	7500	8000	-	-	-	
	5050	6400	7000	7200	8000	10000	10000	
	4400	4500	4900	5200	-	-	-	
	3400	3500	3800	4000	4500	5500	5500	
	2000	2200	2500	2300	-	-	-	
	1400	1550	1550	3000	2600	3000	3000	
	1100	1300	1300	1500	-	-	-	
	700	900	1050	1260	1400	1700	2100	2650
	-	-	-	-	-	-	-	-
	-	-	-	-	-	-	-	-
	150	200	200					
	200	250	300					
	400	500	600					
	400	500	600					
	6		7					
	22.2 285×310×246			24 285×352×246	33.8 431×380×246			47 431×392×246
	22.2 285×310×246			24 285×352×246	33.8 431×380×246			47 431×392×246
	2a2b			2a2b	2a2b			
	AU-100, AU-100E (Max.4a4b)			AU-100, AU-100E (Max.4a4b)	AU-100, AU-100E (Max.4a4b)			
	-			-	-			

	MT-800/□
	●
	690V
	690V
	6kV
	10A, 20
	200~800A
	11.5
	360×530×212

Specification table

MC type
Magnetic Contactors (4pole)

Frame size				18AF			
Type				MC-6a/4	MC-9a/4	MC-12a/4	MC-18a/4
	Screw clamp terminal			●			
Number of poles				4pole			
Rated operational voltage (Ue)				690V			
Rated insulation voltage (Ui)				690V			
Rated frequency				50/60Hz			
Rated impulse withstand voltage, Uimp				6kV			
Maximum operating rate in operating cycles per hour (AC1)				1800 operations per hour			
Durability	Mechanical			15 mil. operations			
	Electrical			0.5 mil. operations		0.8 mil. operations	
Current and power		Thermal current	[A]	25	25	25	40
	AC-1	200/240V	[kW]	9	9	9	15
			[A]	25	25	25	40
		380/400V	[kW]	17	17	17	27
			[A]	25	25	25	40
		500/550V	[kW]	21	21	21	35
			[A]	25	25	25	40
		690V	[kW]	27	27	27	44
			[A]	25	25	25	40
UL rating (50/60Hz)	Continuous current		[A]	25	25	25	32
	Single	110~120V	[HP]	0.5	0.5	0.75	1
	Phase	220~240V	[HP]	1.5	1.5	2	3
	Three	200~208V	[HP]	2	2	3	7.5
	Phase	220~240V	[HP]	3	3	5	7.5
		440~480V	[HP]	5	5	7.5	10
		550~600V	[HP]	7.5	7.5	10	15
Size and weight	AC	Weight	[kg]	0.33			
	Control	Size (W×H×D)	[mm]	45×73.5×80.4			
	DC	Weight	[kg]	0.4			
	Control	Size (W×H×D)	[mm]	45×73.5×96.6			
Auxiliary (Standard)				-			
Auxiliary	Side mount			UA-1			
	Front mount			UA-2, UA-4			

	22AF	40AF		85AF			
	MC-22a/4	MC-32a/4	MC-40a/4	MC-50a/4	MC-65a/4	MC-75a/4	MC-85a/4
	●	●		●			
	4pole	4pole		4pole			
	690V	690V		690V			
	690V	690V		1000V			
	50/60Hz	50/60Hz		50/60Hz			
	6kV	6kV		8kV			
	1800 operations	1800 operations per hour		1800 operations per hour			
	15 mil. operations	15 mil. operations		12 mil. operations			
	1 mil. operations	1 mil. operations		1 mil. operations			
	40	50	60	80	100	110	135
	15	18	22	30	37	41	51
	40	50	60	80	100	110	135
	27	35	42	56	70	76	95
	40	50	60	80	100	110	135
	35	43	52	70	88	97	120
	40	50	60	80	100	110	135
	44	55	66	88	110	120	150
	40	50	60	80	100	110	135
	32	45	50	70	80	90	100
	2	2	3	3	5	5	7.5
	3	5	5	7.5	10	15	15
	7.5	7.5	10	10	15	20	25
	7.5	10	10	15	20	25	30
	10	20	25	30	40	50	50
	15	20	25	30	40	50	50
	0.4	0.59		1.2			
	47.2×80×86.8	59×83.5×94.6		91×123.5×117.8			
	0.5	0.7		1.29			
	47.2×80×113.2	59×83.5×121		91×123.5×117.8			
	-	-		-			
	AU-1	AU-1		AU-1			
	UA-2, UA-4	UA-2, UA-4		UA-2, UA-4			

Specification table

MC type
Magnetic Contactors (4pole)

Frame size				225AF				
Type				MC-100a/4	MC-130a/4	MC-150a/4	MC-185a/4	MC-225a/4
	Screw clamp terminal			●				
Number of poles				4pole				
Rated operational voltage (Ue)				690V				
Rated insulation voltage (Ui)				1000V				
Rated frequency				50/60Hz				
Rated impulse withstand voltage, Uimp				8kV				
Maximum operating rate in operating cycles per hour (AC1)				1200 operations per hour				
Durability	Mechanical			5 mil. operations				
	Electrical			0.8 mil. operations				
Current and power		Thermal current	[A]	200	250	275	300	350
	AC-1	200/240V	[kW]	57	60	76	87	100
			[A]	200	250	275	300	350
		380/400V	[kW]	106	110	142	165	185
			[A]	200	250	275	300	350
		500/550V	[kW]	132	137	180	205	230
			[A]	200	250	275	300	350
		690V	[kW]	165	170	225	255	290
			[A]	200	250	275	300	350
UL rating (50/60Hz)	Continuous current		[A]	200	250	275	300	350
	Single Phase	110~120V	[HP]	7.5	10	15	15	15
		220~240V	[HP]	15	20	25	30	40
	Three Phase	200~208V	[HP]	30	40	40	60	60
		220~240V	[HP]	30	40	50	60	75
		440~480V	[HP]	60	75	100	125	150
		550~600V	[HP]	60	75	100	125	150
Size and weight	AC Control	Weight	[kg]	5.6				
		Size (W×H×D)	[mm]	175×203×185				
	DC Control	Weight	[kg]	5.6				
		Size (W×H×D)	[mm]	175×203×185				
Auxiliary (Standard)				2NO2NC				
Auxiliary	Side mount			AU-100, AU-100E				
	Front mount			-				

* - FLA=722 A, LRA=5618 A
** - FLA=566 A, LRA=4495 A

	400AF			800AF		
	MC-265a/4	MC-330a/4	MC-400a/4	MC-500a/4	MC-630a/4	MC-800a/4
	●			●		
	4pole			4pole		
	690V			690V		
	1000V			1000V		
	50/60Hz			50/60Hz		
	8kV			8kV		
	1200 operations per hour			1200 operations per hour		
	2.5 mil. operations			2.5 mil. operations		
	0.5 mil. operations			0.5 mil. operations		
	400	500	520	700	900	1050
	115	135	160	245	255	310
	400	500	520	700	900	1050
	215	250	300	450	470	570
	400	500	520	700	900	1050
	265	315	375	560	590	710
	400	500	520	700	900	1050
	335	390	470	710	740	900
	400	500	520	700	900	1050
	400	500	520	700	900	1050
	-	-	-	-	-	-
	-	-	-	-	-	-
	75	100	125	150	200	200
	100	100	150	200	250	300
	200	200	300	400	500	600*
	200	200	300	400	500	600**
	9.9 206×243×205			26.3 346×310 ×244		
	9.9 206×243×205			26.3 346×310 ×244		
	2NO2NC			2NO2NC		
	AU-100, AU-100E			AU-100, AU-100E		
	-			-		

Specification table

Renewable Magnetic Contactor

- Eco-friendly contact material applied (Cd free)
- Type 2 coordination data with MCCB or ACB

Frame size				1260AF		
Type				MCi-900	MCi-1050	MCi-1260
	Screws clamp terminals			●		
Number of poles			[pole]	3		
Rated operational voltage (Ue)			[Vac]	1000		
Rated insulation voltage (Ui)			[Vac]	1000		
Rated frequency			[Hz]	50/60		
Rated impulse withstand voltage (Uimp)			[kV]	8		
Mechanical operating cycle			[cycles/hour]	600	600	300
Eelectrical operating cycle			[cycles/hour]	600	600	300
Durability	Mechanical		[million]	1	1	0.5
	Eletrical (AC-1@690V)		[million]	0.26	0.26	0.15
	Eletrical (AC-1@400V)		[million]	0.5	0.5	0.2
Current and Power (IEC)	AC-1 1000V 55/60/70°C		[A]	900/850/700	1050/875/720	1260/1060/900
	Thermal current		[A]	900	1050	1260
	Heat dissipation		[W]	100	170	170
Rated Short-time withstand current (Icw) (IEC 60947)	1s		[A]	7000	7500	8000
	10s		[A]	6400	7000	7200
	1min		[A]	3500	3800	4000
	10min		[A]	1550	1550	2300
max. breaking capacity (Icd)	400V		[A]	6000	7500	7500
	690V		[A]	5000	7000	7000
	1000V		[A]	2000	2500	2500
Type-2 Coordination (with MCCB or ACB)			[kA]	42kA (Break time: less than 20ms)		
Current and HP (UL)	Thermal current		[A]	900	1050	1260
	Single phase	110~120V	[HP]	-	-	-
		220~240V	[HP]	-	-	-
	Three phase	200~208V	[HP]	200	200	-
		220~240V	[HP]	250	300	-
		440~480V	[HP]	500	600	-
		550~600V	[HP]	500	600	-
Weight			[kg]	22.2	22.2	25
Size [(W×H×D) mm]				285 x 310 x 246	285 x 310 x 246	285 x 352 x 246
Auxiliary (Standard)				**2a2b**		
Auxiliary	Side mount			AU-100, AU-100E (max.4a4b)		
	Front mount			-		

	2650AF		
	MCi-1700	MCi-2100	MCi-2650
	●		
	3		
	1000		
	1000		
	50/60		
	8		
	300		
	300	300	120
	0.5	0.5	0.3
	0.05	0.05	0.02
	0.05	0.05	0.05
	1700/1450/1300	2100/1750/1500	2650/2350/2150
	1700	2100	2650
	220	350	350
	12000		
	10000		
	5500		
	3000		
	9000	12000	12000
	8000	8500	8500
	3000	3150	3150
	42kA (Break time: less than 50ms)		
	1700	2100	2650
	-	-	-
	-	-	-
	-	-	-
	-	-	-
	-	-	-
	-	-	-
	34.6	34.6	47
	431 x 380 x 246	431 x 380 x 246	431 x 392 x 246
	2a2b		
	AU-100, AU-100E (max.4a4b)		
	-		

Type numbering system

Contactors

MC-6a / R / 220V / 60Hz / SCREW / 1a1b

Rated current	
6a	6A
⋮	
2650a	2650A
9b	9A
⋮	
22b	22A

Version	
-	Standard
R	Reversing
4	4pole

Coil voltage
AC 220V
⋮
DC 24V

Note: See page 22, 23 for details.

Frequency
60Hz
50Hz
50/60HZ

None
Screw
LUG

Auxiliary contact
None
1a1b
2a2b
1a
1b

Renewable contactors

MCi-900 / AC 300V / 50/60Hz / 2a2b

Rated Current	
900	900A
⋮	
2650	2650A

Coil Voltage
AC 300V
⋮
AC 100~240V
DC 100~220V

Frequency
50/60Hz

Auxiliary contact
2a2b

Starters

MS-6a / R / 2H / 220V / 60Hz / 1NO1NC / 0.1

Rated current	
6a	6A
⋮	
800a	800A
9b	9A
⋮	
22b	22A

Contactor version	
-	Standard
R	Reversing

Relay version	
2H	Non-differential (2-heater)
3H	Non-differential (3-heater)
3K	Differential
3D	Class 20

Coil voltage
AC 220V
⋮
DC 24V

Note: See page 22, 23 for details.

Frequency
60Hz
50Hz

Auxiliary contact
無
1a1b
2a2b
1a
1b

Relay setting current	
0.1	0.1A
⋮	
800	800A

Thermal Overload Relay

MT-12 / 2H / 0.1

Rated current	
12	12AF
32	32AF
63	63AF
95	95AF
⋮	
800	800AF

Relay version	
2H	Non-differential (2-heater)
3H	Non-differential (3-heater)
3K	Differential
3D	Class 20

Relay setting current	
0.1	0.1A
⋮	
800	800A

Contactor relays

MR / 4

Poles	
4	4 Pole
6	6 Pole
8	8 Pole

Optional accessories

Auxiliary contact unit

UA1

Version	
UA-1 UA-1E AU-1 AU-100 AU-100E	Side mount
UA-2	Front mount(2P)
UA-4	Front mount (4P)

Note: UA-2: 2NO, 1NO1NC, 2NC UA-4: 4NO, 3NO1NC, 4NC, 2NO2NC, 1NO3NC,

11

Contact composition	
11	1NO+1NC
20	2NO
02	2NC
40	4NO
31	3NO+1NC
22	2NO+2NC
13	1NO+3NC
04	4NC

Surge absorber

US11

Composition and voltage		
1	Varistor+RC	AC 24~48V
2	Varistor+RC	AC 100~125V
3	Varistor+RC	AC 200~240V
4	Varistor+RC	DC 24~48V
5	Varistor+RC	DC 100~125V
6	Varistor+RC	DC 200~220V
11	Varistor	AC/DC 24~48V
12	Varistor	AC/DC 100~125V
13	Varistor	AC/DC 200~240V
14	Varistor	AC/DC 380~440V
22	RC	AC 100~125V

Note: See page 82 for details.

Interlock unit

UR02

Contact composition	
02	2NC
00	None

Wire kit for interlocking

UW32

Rated current	
18	18AF
22	22AF
32	40AF
63	65AF
95	100AF

Separate mounting unit (For relay)

UZ32

Rated current	
12	12AF
32	32AF
63	63AF
95	95AF
150	150AF

Remote reset unit (For relay)

UM

Cable length	
4R	400
5R	500
6R	600

Environment

Standards	IEC/EN 60947-1, IEC/EN 60947-4-1, UL508, K60947
Certifications	CE, UL, CCC
Rated insulation voltage (Ui)	1000V (6A~22A: 690V, 32A~800A: 1000V)
Rated impulse withstand voltage (Uimp)	8kV (6A~22A: 6kV, 32A~800A: 8kV)
Degree of protection	IP20 (Conforming to IEC60529)
Ambient air temperature	Storage: -30°C ~ +65°C (MCi : -40 ~ +80°C)
	Operation: -5°C ~ +55°C (AC Type) -5°C ~ +40°C (MT, DC Type) -25°C ~ +60°C (MT refer to Graph) -25°C ~ +55°C(MCi) 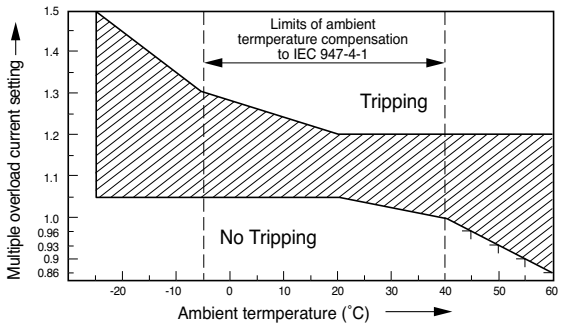
Operating altitude	3000m (8900ft)
Operating positions	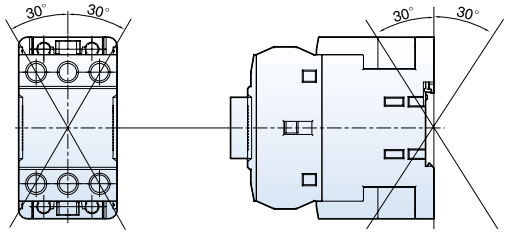
Shock resistance (1/2 sine wave =11ms)	Opened: 8G(MC-2650a / MCi-2650 : 5G)
	Closed: 10G(MC-2650a / MCi-2650 : 5G)
Vibration resistance (Conforms to IEC68-2-6) (5...300 Hz)	Opened: 2G(MC-2650a / MCi-2650 : 1G)
	Closed: 4G(MC-2650a / MCi-2650 : 1G)
Flame resistance	Conforms to UL 94: V0
	Conforms to IEC 695-2-1: 960°C

Connections

Frame \ Wire type		Main terminal size	(AWG / mm²)			mm(max)	Torque [lb-in]	Torque [Nm]	Torque [kgf·cm]
MC-6a/9a		M3.5	18-10/1-4	18-10 / 1-4	18-10 / 1-4	8.3	10	1.13	12
MC-12a			16-10/1.5-4	16-10 / 1.5-4	16-10 / 1.5-4				
MC-18a			16-10/1.5-6	16-10 / 1.5-6	16-10 / 1.5-6				
MC-9b		M4	18-10/1-4	18-10 / 1-4	18-10 / 1-4	9.6	20	2.25	23
MC-12b			16-10/1.5-6	16-10 / 1.5-6	16-10 / 1.5-6				
MC-18b			16-10/1.5-6	16-10 / 1.5-6	16-10 / 1.5-6				
MC-22b			14-8/2.5-10	14-8 / 2.5-10	14-8 / 2.5-10				
MC-32a		M5	-	12-6 / 2.5-16	12-6 / 2.5-16	12.8	35	4	41
MC-40a			-	12-6 / 2.5-16	12-6 / 2.5-16				
MC-50a		M6	-	10-3 / 4-35	10-3 / 4-35	14	35	4	41
MC-65a			-	10-2 / 4-35	10-2 / 4-35				
MC-75a		M8	-	10-1 / 6-50	10-1 / 6-50	17	45	5.1	52
MC-85a			-	10-1/0 / 6-50	10-1/0 / 6-50				
MC-100a			-	10-2/0 / 6-70	10-2/0 / 6-70				
MC-130a		M8	-	8-3/0 / 10-95	8-3/0 / 10-95	24	80	9.1	93
MC-150a			-	8-250kcmil / 10-120	8-250kcmil / 10-120				
MC-6~150a Aux./Coil		M4	20~14 / 0.5~2.5	18~12 / 0.75~2.5	18~12 / 0.75~2.5	7.6	10	1.13	12
MC-185a		M10	-	3-350kcmil / 35-185	3-350kcmil / 35-185	25	130	14.7	150
MC-225a			-	3-400kcmil / 35-185	3-400kcmil / 35-185				
MC-265a		M12	-	2-500kcmil / 35-240	2-500kcmil / 35-240	30	200	22.6	230
MC-330a			-	2-250kcmil x 2 / 35-150 x 2	2-250kcmil x 2 / 35-150 x 2				
MC-400a			-	2-350kcmil x 2 / 35-185 x 2	2-350kcmil x 2 / 35-185 x 2				
MC-500a		M16	-	4/0-300kcmil x 3 / 95-240 x 2	4/0-300kcmil x 3 / 95-240 x 2	40	500	56.5	576
MC-630a/MCi-900			-	95-60 x 5 x 2	95-60 x 5 x 2				
MC-800a/MCi-1050			-	95-80 x 5 x 2	95-80 x 5 x 2				
MC-185~800a/MCi-1050 Aux./Coil		M4	16~10 / 1.25~5.5	16~10 / 1.25~5.5	16~10 / 1.25~5.5	7.6	15	1.75	18
MC-1260a/MCi-1260		M12	-	50mm×10mm×2ea	-	-	200	22.6	230
MC-1400a		M12	-	100mm×5mm×2ea 100mm×5mm×3ea 100mm×5mm×4ea 100mm×10mm×3ea	-	-	200	22.6	230
MC-1700a/MCi-1700									
MC-2100a/MCi-2100									
MC-2650a/MCi-2650									

Control coil characteristics (3pole)

Frame size			18AF	22AF	40AF	65AF	100AF	150AF(A)
Type			MC-6a MC-9a MC-12a MC-18a MR-4, 6, 8	MC-9b MC-12b MC-18b MC-22b	MC-32a MC-40a	MC-50a MC-65a MD-30a	MC-75a MC-85a MC-100a MD-60a MD-100a	MC-130a MC-150a
AC coil								
Control voltage		[Uc]						48, 110~120, 220~240, 300, 380~440, 500V
	50Hz	[V]	24, 32, 36, 42, 48, 80, 100, 110, 120, 220, 230, 240, 380, 400, 415, 440, 500, 550V					
	60Hz	[V]	24, 48, 110, 120, 200, 208, 220, 230, 240, 277, 380, 440, 480, 600V					
Voltage limit		[Uc]	85 ~110%					
Coil consumption at 20°C								
AC 220V	Inrush	[VA]	70	70	90	110	240	110
60Hz	Holding	[VA]	9	9	9	13	17	18
Heat dissipation		[W]	2.3	2.3	2.7	2.8	5.4	2.7
Operating time								
	Closing	[ms]	15 ... 30	15 ... 30	15 ... 30	15 ... 30	15 ... 30	20 ... 40
	Opening	[ms]	4 ... 19	4 ... 19	4 ... 19	4 ... 19	10 ... 30	50 ... 7
DC coil								
Control voltage		[Uc]	12, 20, 24, 30, 48, 60, 80, 100, 110, 125, 200, 220, 250V					24, 48
Voltage limit			85~110%					
Coil consumption at 20°C (Note 3)								
	Inrush [W]	DC 24V	6	6	8	13	19	280
		DC 48V	6	6	9	11	19	210
		DC 110V	6	6	9	10	20	-
		DC 220V	6	6	9	13	20	-
	Holding [W]	DC 24V	6	6	8	13	19	7.5
		DC 48V	6	6	9	11	19	7.5
		DC 110V	6	6	9	10	20	-
		DC 220V	6	6	9	13	20	-
Time constant (L/R)		[ms]	28	28	28	65	75	
Operating time	Closing	[ms]	40 ... 70 (Note 2)	40 ... 70 (Note 2)	50 ... 65	50 ... 65	100 ... 120	70 ... 80
	Opening	[ms]	4 ... 19	4 ... 19	4 ... 19	4 ... 19	10 ... 25	60 ... 70

Note: 1. Either semi-electronic coil (A) or electronic coil (B) can be chosen for MC-130a and MC-150a.
2. Operation time may increase up to 80ms during re-supply after ON state continues.
3. For Coil consumptions for the other coil ratings, please contact the manufacturer.

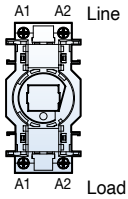

Note: A1 (A2) in line side is internally connected to A1 (A2) in load side.

Frame size			150AF(B)	225AF	400AF	800AF	1260AF	2650AF
Type			MC-130a MC-150a	MC-185a MC-225a	MC-265a MC-330a MC-400a	MC-500a MC-630a MC-800a MCi-900 MCi-1050	MC-1260a MCi-1260	MC-1400a MC-1700a MC-2100a MC-2650a MCi-1700 MCi-2100 MCi-2650
AC/DC common coil								
Control voltage		[Uc]						
	AC/DC		AC 24	24/24	DC 24	-	-	-
	AC/DC		24~48/24~48	48/48	-	100/100	-	-
	AC/DC		100~240/100~220	100~240/100~220	100~240/100~220	200/200	100~240/100~220	100~240/100~220
	AC or DC		DC 70~110	AC 300	AC 300	AC 300	-	-
	AC or DC		DC 110	AC 400	AC 400	AC 400	-	-
	AC or DC		-	AC 500	AC 500	AC 500	-	-
Voltage limit		[Uc]	85~110% (Note 1)					
Coil consumption at 20°C (Note 2)								
AC 220V	Inrush	[VA]	320	380	571	1000	1500	2500
50/60Hz	Holding	[VA]	10	11.6	14	29	24	50
Heat dissipation		[W]	4.5	4.7	5	7.8	7.8	8.7
Operating time								
	Closing	[ms]	70	70	55	75	75	80
	Opening	[ms]	70	70	55	75	75	70

Note: 1. Voltage limit for DC 24V coil is 75~110%.
2. Operating time for DC 24V coil is 90ms.
3. Either semi-electronic coil (A) or electronic coil (B) can be chosen for MC-130a and MC-150a.
4. Please check the details page for each AF range.

Control coil characteristics (4pole)

Frame size			18AF	22AF	40AF	85AF
Type			MC-6a/4P MC-9a/4P MC-12a/4P MC-18a/4P	MC-22a/4P	MC-32a/4P MC-40a/4P	MC-50a/4P MC-65a/4P MC-75a/4P MC-85a/4P
AC coil						
Control voltage		[Uc]				
	50Hz	[V]	24, 32, 42, 48, 80, 100, 110, 220, 230, 240, 380, 400, 500, 550	24, 32, 42, 48, 65, 80, 100, 110, 220, 230, 240, 380, 400, 415, 500, 550, 240(wide)		24, 48, 100, 110, 200, 220, 230, 240, 380, 400, 415, 440, 500, 550, 240(wide)
	60Hz	[V]	24, 48, 100, 110, 120, 200, 208, 220, 230, 240, 277, 380, 480, 600	24, 48, 110, 120, 208, 220, 240, 277, 380, 440, 480, 600		24, 48, 110, 120, 208, 220, 230, 240, 277, 380, 440, 480, 600
	50/60Hz	[V]	24, 48, 100, 110, 120, 200, 220, 230, 20, 380, 415, 440, 500, 550	24, 48, 100, 110, 120, 200, 220, 230, 240, 380, 415, 440, 500, 550		24, 48, 110, 120, 220, 230, 240, 380, 415, 440, 500, 550
Voltage limit			85~110%			
Coil consumption at 20°C						
AC 220V	Inrush	[VA]	70	95	95	220
60Hz	Holding	[VA]	9	9	9	17
Heat dissipation		[W]	2.3	2	2	5
Operating time	Closing	[ms]	15...30	10~17	10~17	16~25
	Opening	[ms]	4...9	6~9	6~9	8~15
DC coil						
Control voltage		[Uc]	12, 20, 24, 48, 60, 80, 100, 110, 125, 200, 220, 250			
Voltage limit			85~110%			
Coil consumption at 20°C						
DC 100V	Inrush	[W]	6	9	9	460
(18AF: DC110V)	Holding	[W]	6	9	9	6
Time constant (L/R)		[ms]	28	50	50	-
Operating time	Closing	[ms]	40...60	45~55	45~55	20~30
	Opening	[ms]	4...19	8~15	8~15	13~20

Frame size			225AF	400AF	800AF
Type			MC-100a/4P MC-130a/4P MC-150a/4P MC-185a/4P MC-225a/4P	MC-265a/4P MC-330a/4P MC-400a/4P	MC-500a/4P MC-630a/4P MC-800a/4P
AC/DC common coil					
Control voltage		[Uc]			
		[AC/DC]	24/24	24(DC Only)	-
		[AC/DC]	48/48	-	100/100
		[AC/DC]	100~240/100~220	100~240/100~220	200/200
		[AC]	300	300	300
		[AC]	400	400	400
		[AC]	500	500	500
Voltage limit			85~110% (Note 1)		
Coil consumption at 20°C (Note 2)					
AC 220V	Inrush	[VA]	380	571	1000
50/60Hz	Holding	[VA]	11.6	14	29
Heat dissipation		[W]	4.7	5	7.8
Operating time	Closing	[ms]	70	55	75
	Opening	[ms]	70	55	75

Note: 1. Voltage limit for DC 24V coil is 75~110%.
2. Operating time for DC 24V coil is 90ms.

Marking

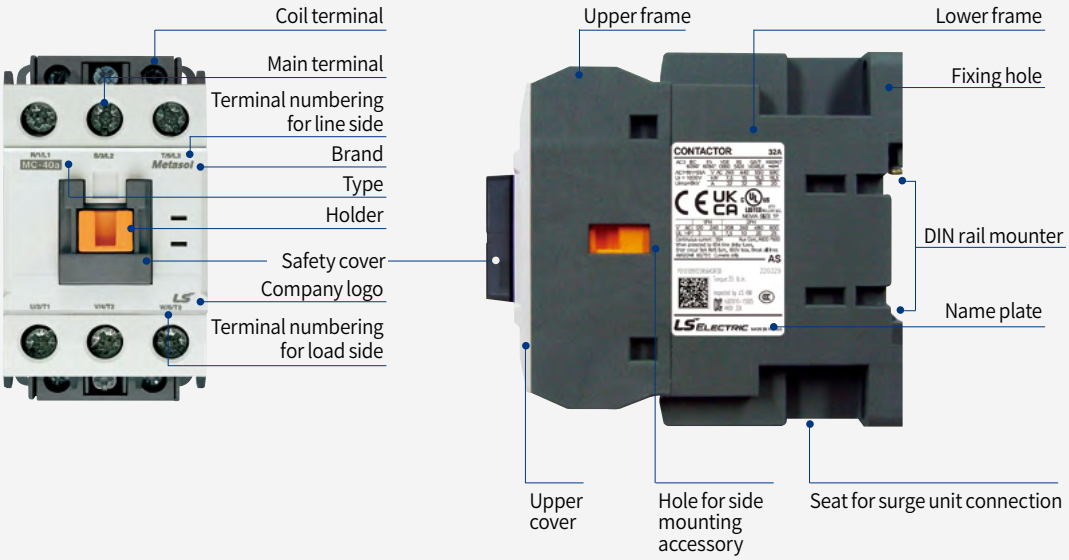
Coil terminal
Main terminal
Terminal numbering for line side
Brand
Type
Holder
Safety cover
Company logo
Terminal numbering for load side
Upper frame
Lower frame
Fixing hole
DIN rail mounter
Name plate
Upper cover
Hole for side mounting accessory
Seat for surge unit connection

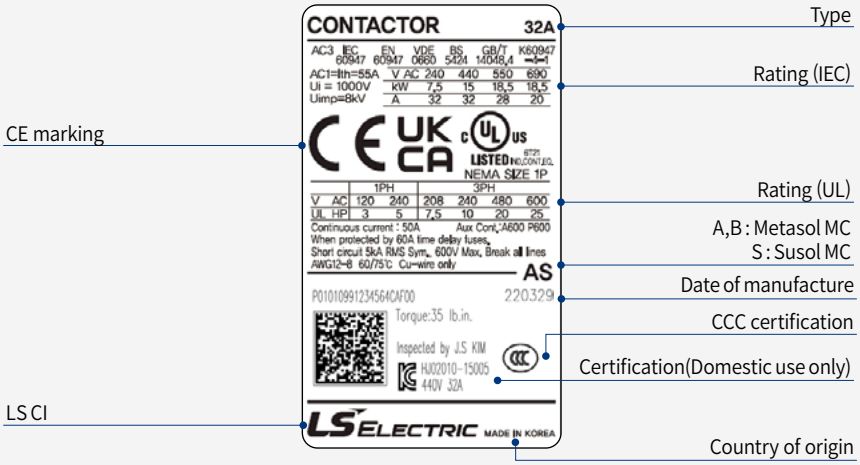
CONTACTOR
32A
Type
Rating (IEC)
CE marking
Rating (UL)
A,B : Metasol MC
S : Susol MC
Date of manufacture
CCC certification
Certification(Domestic use only)
LS CI
Country of origin

Internal structure

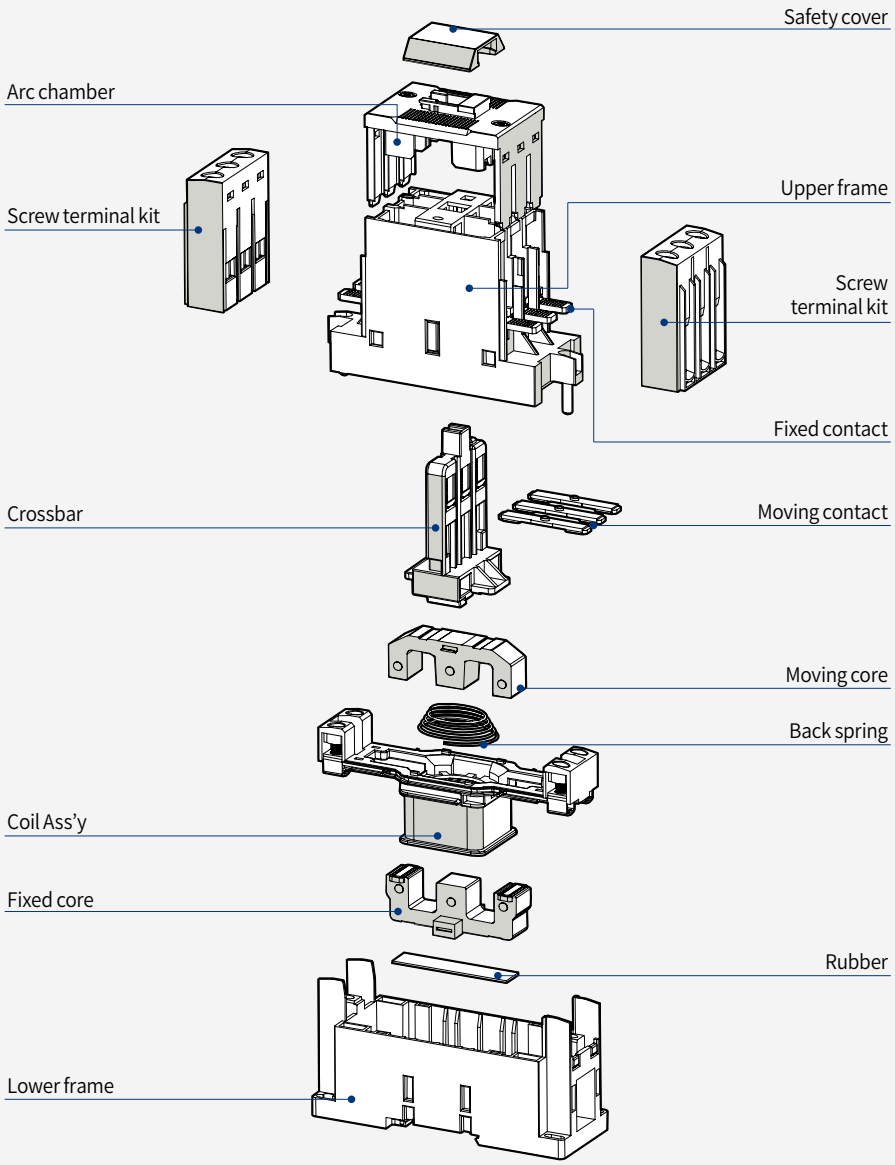

18AF

- 3-pole (NO) main contact
- Finger-proof design
- DIN rail (35mm) or screw mount
- AC or DC control in different physical sizes
- Front/side mount accessories available
- Direct mount overload relay
- 1NO or 1NC auxiliary contacts built-in as standard
- IP20 rated

MC-18a

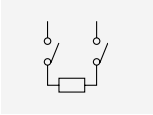

2pole for DC contact

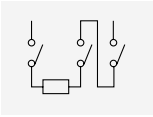

3pole for DC contact

Rating

Contactor type			MC-6a		MC-9a		MC-12a		MC-18a	
			kW	A	kW	A	kW	A	kW	A
AC duty	AC3	200/240V	2.2	9	2.5	11	3.5	13	4.5	18
		380/440V	3	7	4	9	5.5	12	7.5	18
		500/550V	3	6	4	7	7.5	12	7.5	13
		690V	3	4	4	5	7.5	9	7.5	9
	AC4	200/240V	1.5	7	1.5	8	2.2	11	3.7	16
		380/440V	2.2	5	2.2	6	4	9	4	11
	AC1		-	25	-	25	-	25	-	32
DC1 duty (L/R=1ms)	2-pole in series	24V	-	10	-	10	-	12	-	18
		48V	-	10	-	10	-	12	-	18
		110V	-	6	-	6	-	10	-	13
	3-pole in series	24V	-	10	-	10	-	12	-	18
		48V	-	10	-	10	-	12	-	18
		110V	-	8	-	8	-	12	-	18
DC3, 5 duty (L/R=15ms)	2-pole in series	24V	-	8	-	8	-	12	-	12
		48V	-	4	-	4	-	6	-	6
		110V	-	2.5	-	2.5	-	4	-	4
	3-pole in series	24V	-	8	-	8	-	12	-	12
		48V	-	6	-	6	-	10	-	10
		110V	-	4	-	4	-	8	-	8
Directly mountable overload relay			MT-12							
Conductor size (Solid, stranded) (Max number of conductors: 2)		AWG	18~10		16~10		16~8		14~8	
		mm^2	1~4		1.5~4		1.5~10		2.5~10	
Conductor type			65/75°C Cu-wire only							

Coil voltage

AC	50Hz	24, 32, 36, 42, 48, 80, 100, 110, 120, 220, 230, 240, 380, 400, 415, 440, 500, 550V
	60Hz	24, 48, 110, 120, 200, 208, 220, 230, 240, 277, 380, 440, 480, 600V
DC		12, 20, 24, 30, 48, 60, 80, 100, 110, 125, 200, 220, 250V

* Check polarity when wiring control power (+ Positive and - Negative)

Certification
• CE (IEC) • UL508 • CCC

Accessories

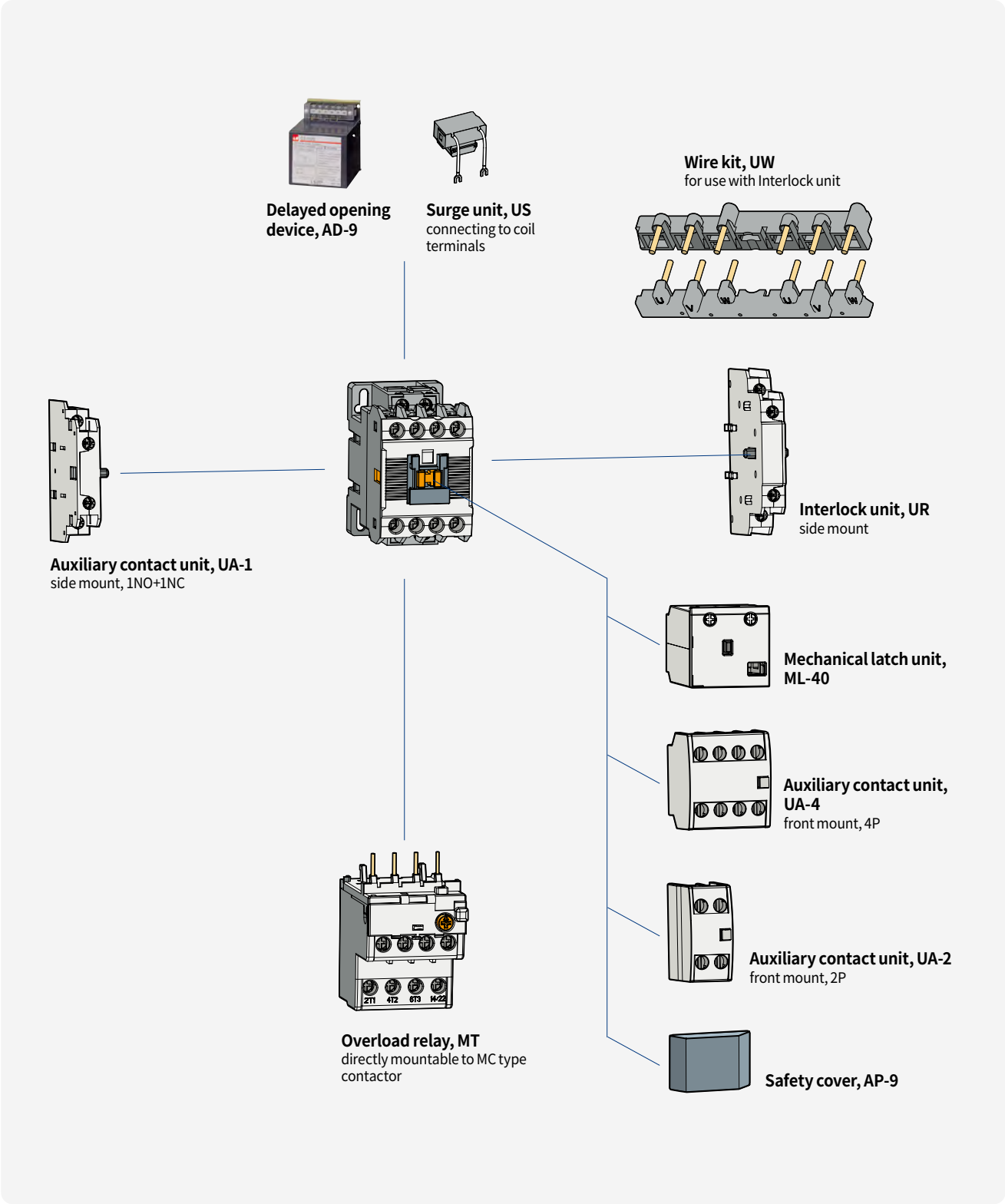

22AF

- 3-pole (NO) main contact
- Finger-proof design
- DIN rail (35mm) or screw mount
- AC or DC control in different physical sizes
- Front/side mount accessories available
- Direct mount overload relay
- 1NO1NC auxiliary contacts built-in as standard
- UA-1 is available on only left side
- IP20 rated

MC-22b

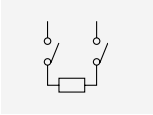

2pole for DC contact

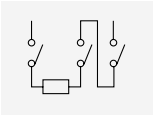

3pole for DC contact

Rating

Contactor type			MC-9b		MC-12b		MC-18b		MC-22b	
			kW	A	kW	A	kW	A	kW	A
AC duty	AC3	200/240V	2.5	11	3.5	13	4.5	18	5.5	22
		380/440V	4	9	5.5	12	7.5	18	11	22
		500/550V	4	7	7.5	12	7.5	13	15	20
		690V	4	6	7.5	9	7.5	9	15	18
	AC4	200/240V	1.5	8	2.2	11	3.7	16	3.7	18
		380/440V	2.2	6	4	9	4	11	5.5	13
	AC1		-	25	-	27	-	40	-	45
DC1 duty (L/R=1ms)	2-pole in series	24V	-	10	-	12	-	18	-	20
		48V	-	10	-	12	-	18	-	20
		110V	-	6	-	10	-	13	-	15
	3-pole in series	24V	-	10	-	12	-	18	-	20
		48V	-	10	-	12	-	18	-	20
		110V	-	8	-	12	-	18	-	20
DC3, 5 duty (L/R=15ms)	2-pole in series	24V	-	8	-	12	-	12	-	20
		48V	-	4	-	6	-	6	-	15
		110V	-	2.5	-	4	-	4	-	8
	3-pole in series	24V	-	8	-	12	-	12	-	20
		48V	-	6	-	10	-	10	-	20
		110V	-	4	-	8		8	-	15
Directly mountable overload relay			MT-32							
Conductor size (Solid, stranded) (Max number of conductors: 2)		AWG	16~10		16~8		14~8		14~8	
		mm²	1.5~4		1.5~10		2.5~10		2.5~10	
Conductor type			65/75°C Cu-wire only							

Coil voltage

AC	50Hz	24, 32, 36, 42, 48, 80, 100, 110, 120, 220, 230, 240, 380, 400, 415, 440, 500, 550V
	60Hz	24, 48, 110, 120, 200, 208, 220, 230, 240, 277, 380, 440, 480, 600V
DC		12, 20, 24, 30, 48, 60, 80, 100, 110, 125, 200, 220, 250V

* Check polarity when wiring control power (+ Positive and - Negative)

Certification
• CE (IEC) • UL508 • CCC

Accessories

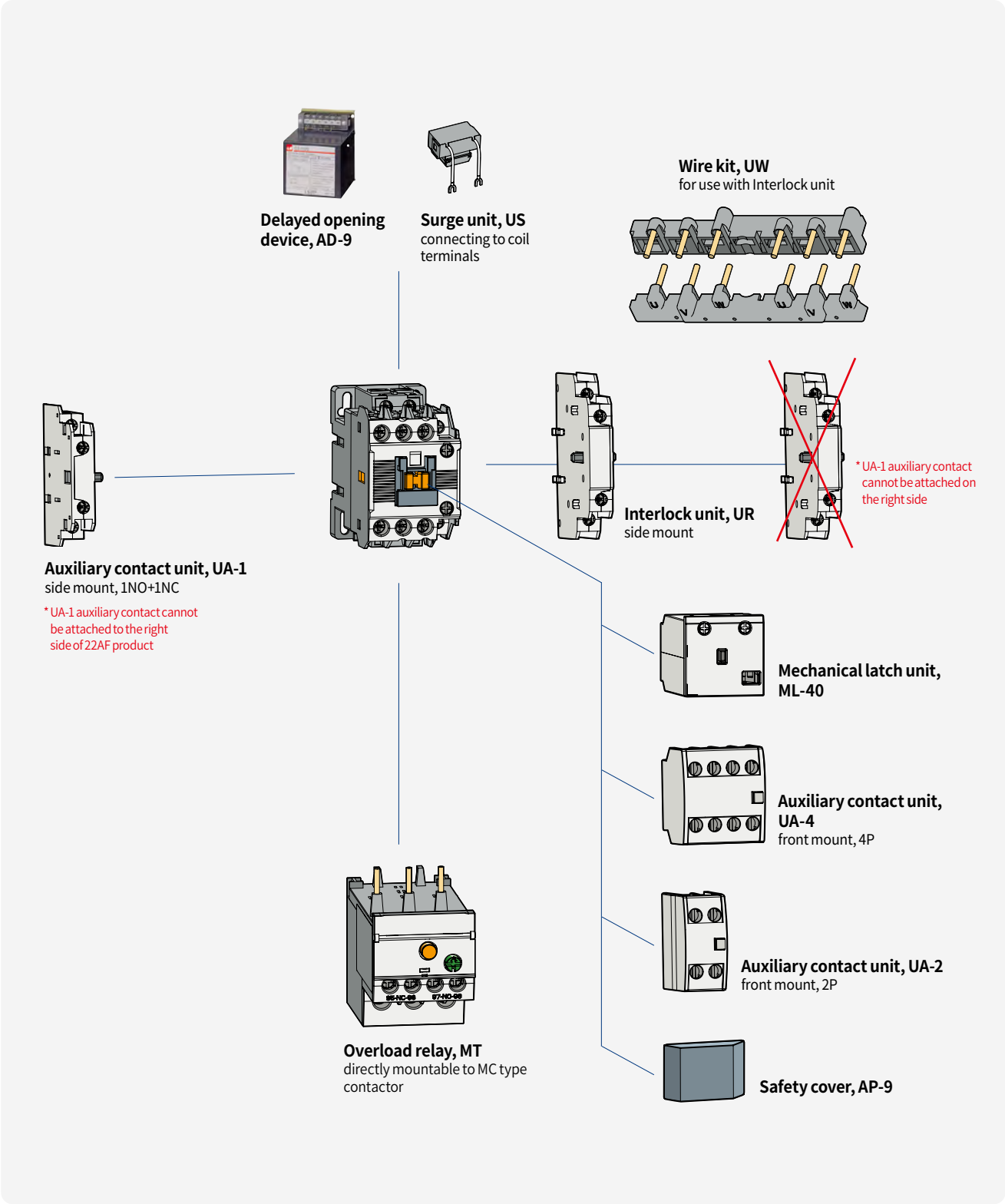

40AF

- 3-pole (NO) main contact
- Finger-proof design
- DIN rail (35mm) or screw mount
- AC or DC control in different physical sizes
- Front/side mount accessories available
- Direct mount overload relay
- 2NO2NC auxiliary contact built-in as standard
- IP20 rated

MC-40a

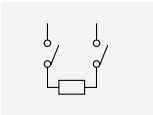

2pole for DC contact

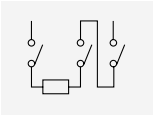

3pole for DC contact

Rating

Contactor type			MC-32a		MC-40a	
			kW	A	kW	A
AC duty	AC3	200/240V	7.5	32	11	40
		380/440V	15	32	18.5	40
		500/550V	18.5	28	22	32
		690V	18.5	20	22	23
		1000V	22	17	22	17
	AC4	200/240V	4.5	20	5.5	25
		380/440V	7.5	17	11	24
	AC1		-	55	-	60
DC1 duty (L/R=1ms)	2-pole in series	24V	-	25	-	35
		48V	-	25	-	35
		110V	-	25	-	25
	3-pole in series	24V	-	25	-	35
		48V	-	25	-	35
		110V	-	25	-	35
DC3, 5 duty (L/R=15ms)	2-pole in series	24V	-	25	-	35
		48V	-	20	-	20
		110V	-	10	-	10
	3-pole in series	24V	-	25	-	35
		48V	-	25	-	30
		110V	-	20	-	20
Directly mountable overload relay			MT-32			
Conductor size (Solid, stranded) (Max number of conductors: 2)		AWG	12~8		8~6	
		mm²	2.5~10		10~16	
Conductor type			65/75°C Cu-wire only			

Coil voltage

AC	50Hz	24, 32, 36, 42, 48, 80, 100, 110, 120, 220, 230, 240, 380, 400, 415, 440, 500, 550V
	60Hz	24, 48, 110, 120, 200, 208, 220, 230, 240, 277, 380, 440, 480, 600V
DC		12, 20, 24, 48, 60, 80, 100, 110, 125, 200, 220, 250V

Certification
• CE (IEC) • UL508 • CCC

Accessories

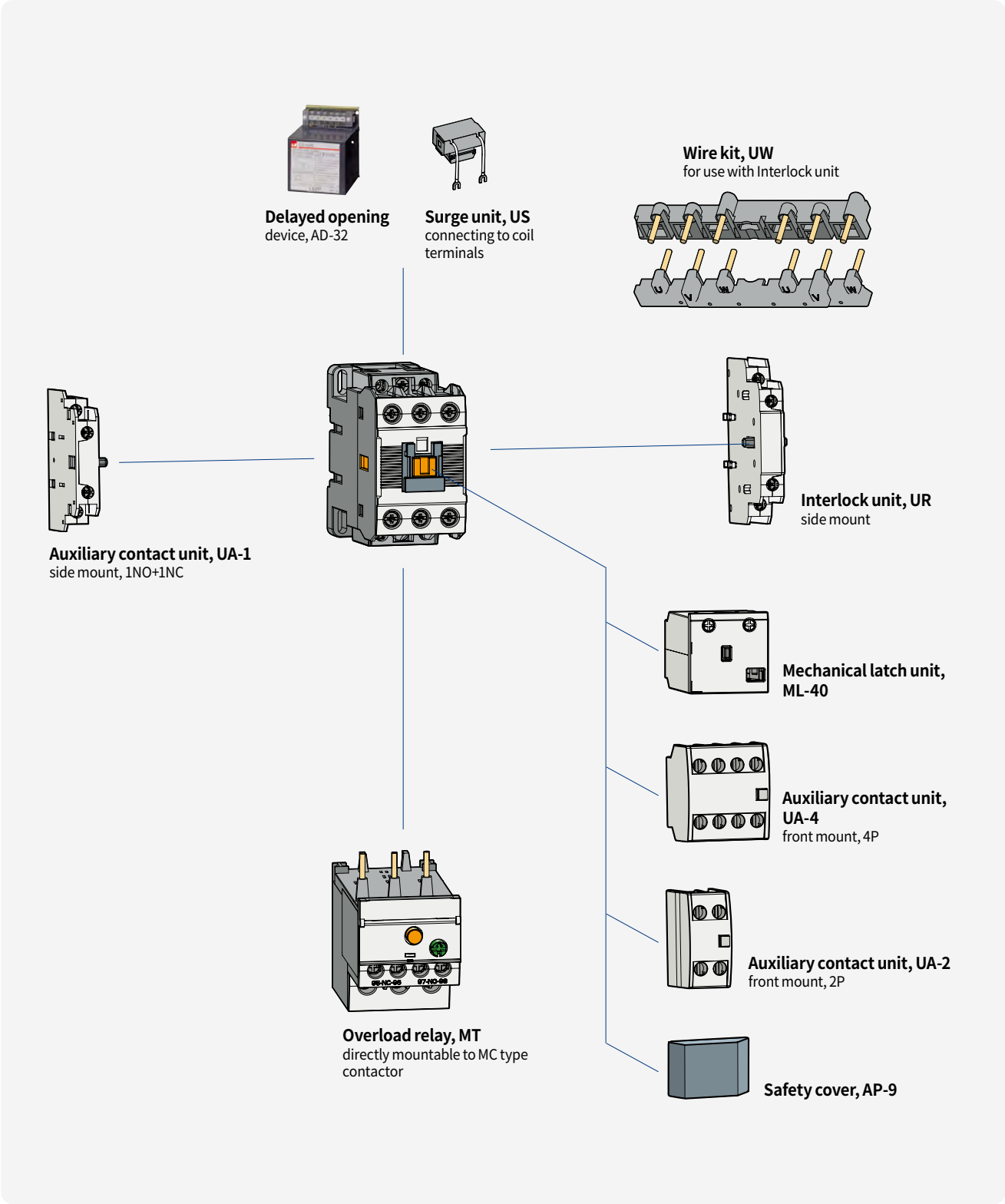

65AF

- 3-pole (NO) main contact
- Finger-proof design
- DIN rail (35mm) or screw mount
- Both screw and box terminal (lug) types are available
- AC or DC control in different physical sizes
- Front/side mount accessories available
- Direct mount overload relay
- 2NO2NC auxiliary contacts built-in as standard
- IP20 rated

MC-65a

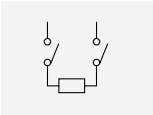

2pole for DC contact

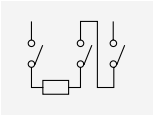

3pole for DC contact

Rating

Contactor type			MC-50a		MC-65a	
			kW	A	kW	A
AC duty	AC3	200/240V	15	55	18.5	65
		380/440V	22	50	30	65
		500/550V	30	43	33	60
		690V	30	28	33	35
		1000V	30	23	30	23
	AC4	200/240V	7.5	35	11	50
		380/440V	15	32	22	47
	AC1		-	100	-	115
DC1 duty (L/R=1ms)	2-pole in series	24V	-	50	-	50
		48V	-	40	-	40
		110V	-	35	-	35
	3-pole in series	24V	-	50	-	65
		48V	-	50	-	65
		110V	-	50	-	65
DC3, 5 duty (L/R=15ms)	2-pole in series	24V	-	45	-	45
		48V	-	25	-	25
		110V	-	15	-	15
	3-pole in series	24V	-	50	-	50
		48V	-	35	-	35
		110V	-	30	-	30
Directly mountable overload relay			MT-63			
Conductor size (Solid, stranded) (Max number of conductors: 2)		AWG	10~4		8~3	
		mm²	6~25		10~35	
Conductor type			65/75°C Cu-wire only			

Coil voltage

AC	50Hz	24, 32, 36, 42, 48, 80, 100, 110, 120, 220, 230, 240, 380, 400, 415, 440, 500, 550V
	60Hz	24, 48, 110, 120, 200, 208, 220, 230, 240, 277, 380, 440, 480, 600V
DC		12, 20, 24, 48, 60, 80, 100, 110, 125, 200, 220, 250V

Certification
• CE (IEC) • UL508 • CCC

Accessories

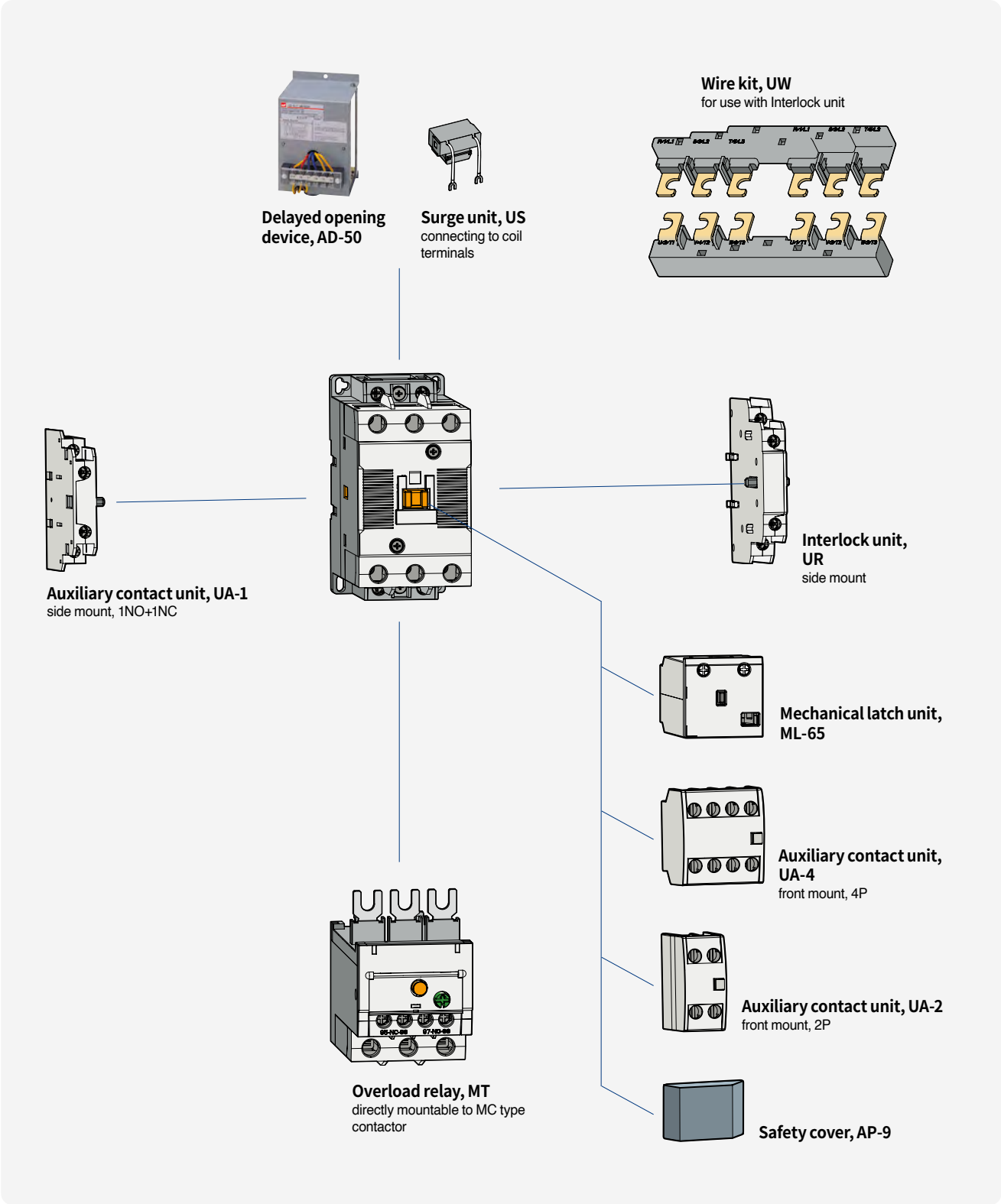

100AF

- 3-pole (NO) main contact
- Finger-proof design
- DIN rail (35, 70mm) or screw mount
- Both screw and box terminal (lug) types are available
- AC or DC control in different physical sizes
- Front/side mount accessories available
- Direct mount overload relay
- 2NO2NC auxiliary contacts built-in as standard
- IP20 rated

MC-100a

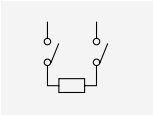

2pole for DC contact

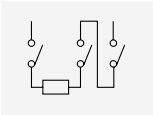

3pole for DC contact

Rating

Contactor type			MC-75a		MC-85a		MC-100a	
			kW	A	kW	A	kW	A
AC duty	AC3	200/240V	22	75	25	85	30	105
		380/440V	37	75	45	85	55	105
		500/550V	37	64	45	75	55	85
		690V	37	42	45	45	55	65
		1000V	37	28	37	28	37	28
	AC4	200/240V	13	55	15	65	19	80
		380/440V	25	52	30	62	37	75
	AC1		-	125	-	135	-	160
DC1 duty (L/R=1ms)	2-pole in series	24V	-	75	-	80	-	100
		48V	-	65	-	65	-	100
		110V	-	50	-	50	-	80
	3-pole in series	24V	-	75	-	80	-	100
		48V	-	75	-	80	-	100
		110V	-	75	-	80	-	100
DC3, 5 duty (L/R=15ms)	2-pole in series	24V	-	65	-	65	-	100
		48V	-	40	-	40	-	60
		110V	-	20	-	20	-	40
	3-pole in series	24V	-	80	-	80	-	100
		48V	-	60	-	60	-	90
		110V	-	50	-	50	-	80
Directly mountable overload relay			MT-95					
Conductor size (Solid, stranded) (Max number of conductors: 2)		AWG	8~2		8~0		8~00	
		mm²	10~35		10~50		10~70	
Conductor type			65/75°C Cu-wire only					

Coil voltage

AC	50Hz	24, 32, 36, 42, 48, 80, 100, 110, 120, 220, 230, 240, 380, 400, 415, 440, 500, 550V
	60Hz	24, 48, 110, 120, 200, 208, 220, 230, 240, 277, 380, 440, 480, 600V
DC		12, 20, 24, 48, 60, 80, 100, 110, 125, 200, 220, 250V

Certification
• CE (IEC) • UL508 • CCC

Accessories

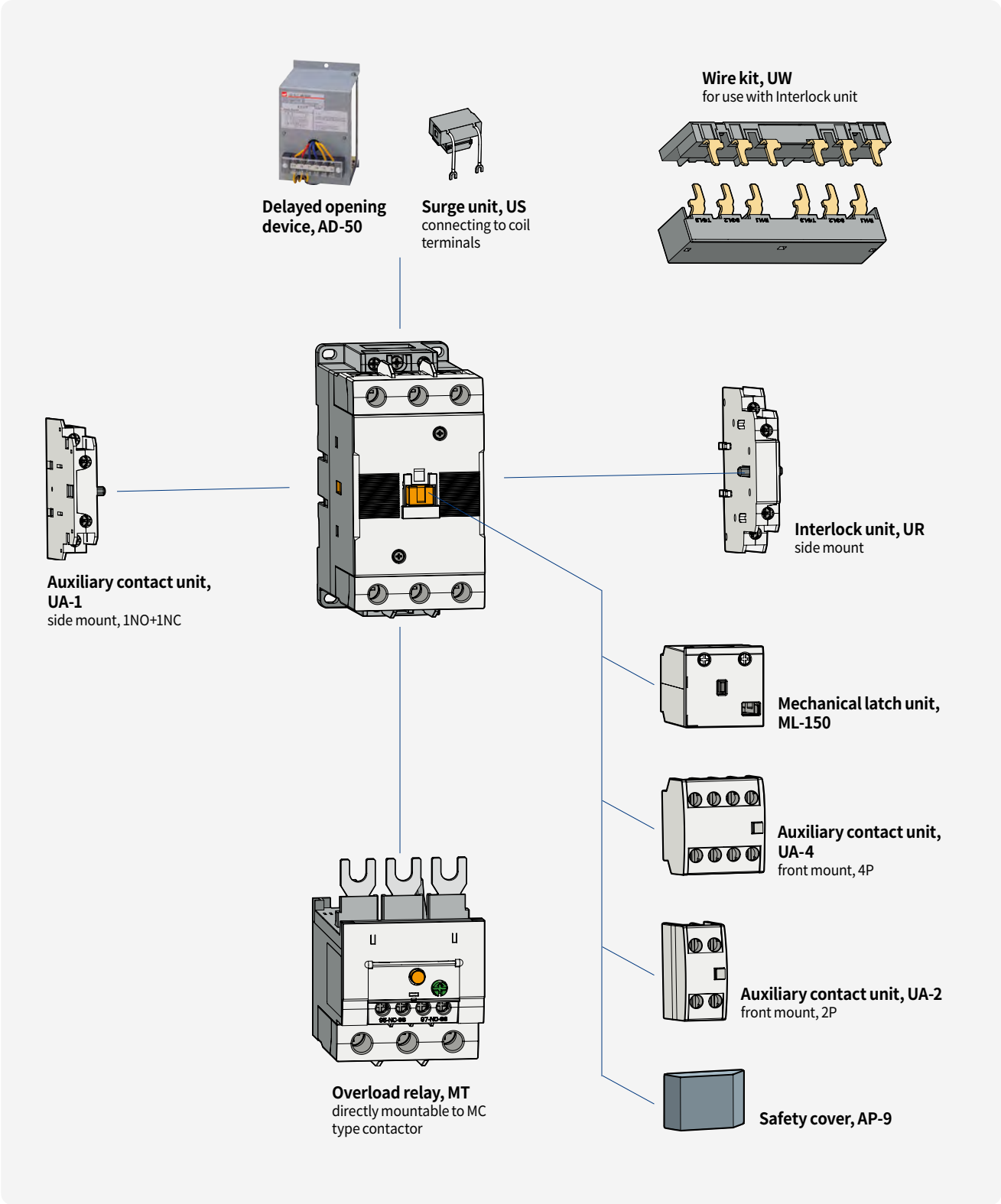

150AF

- 3-pole (NO) main contact
- Finger-proof design
- DIN rail (70mm) or screw mount
- Both screw and box terminal (lug) types are available
- AC or DC control in the same physical size
- Front/side mount accessories available
- Direct mount overload relay available
- 2NO2NC auxiliary contacts built-in as standard
- IP20 rated

MC-150a

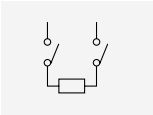

2pole for DC contact

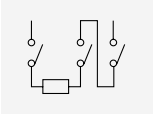

3pole for DC contact

Rating

Contactor type			MC-130a		MC-150a	
			kW	A	kW	A
AC duty	AC3	200/240V	37	130	45	150
		380/440V	60	130	75	150
		500/550V	60	90	70	100
		690V	55	60	55	60
		1000V	75	50	75	50
	AC4	200/240V	22	93	30	120
		380/440V	45	90	55	110
	AC1		-	200	-	250
DC1 duty (L/R=1ms)	2-pole in series	24V	-	120	-	150
		48V	-	100	-	120
		110V	-	80	-	100
	3-pole in series	24V	-	120	-	150
		48V	-	120	-	150
		110V	-	100	-	150
DC3, 5 duty (L/R=15ms)	2-pole in series	24V	-	120	-	150
		48V	-	60	-	100
		110V	-	40	-	80
	3-pole in series	24V	-	120	-	150
		48V	-	90	-	130
		110V	-	80	-	120
Directly mountable overload relay			MT-150			
Conductor size (Solid, stranded) (Max number of conductors: 2)		AWG	3~00		3~4/0	
		mm²	35~70		35~95	
Conductor type			65/75°C Cu-wire only			

Coil voltage

AC / DC		100~240 / 100~220 / 24~48
AC	50/60Hz	24, 48, 100~240, 110~120, 220~240, 300, 380~440, 500V
DC		24, 48, 70~110, 100~220, 110, 220V

Certification
• CE (IEC) • UL508 • CCC

Accessories

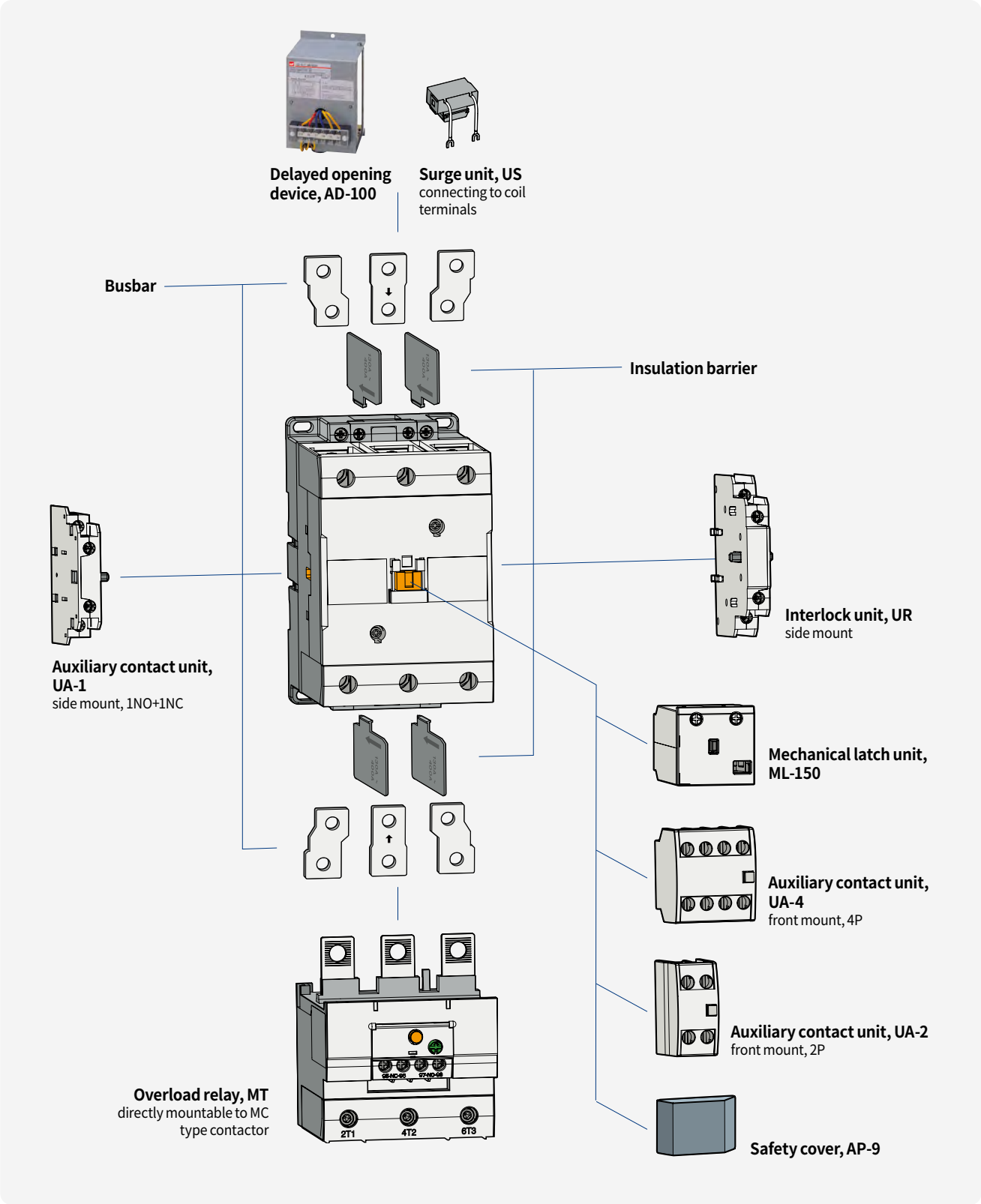

225AF

- 3-pole main contact
- AC/DC general use coil
- Wide coil operating voltage
- Screw mount
- 2NO2NC auxiliary contacts built-in as standard
- Top/side mount accessories available
- Direct mount overload relays available
- IP00 rated

MC-225a

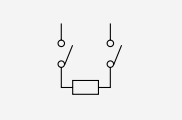

2pole for DC contact

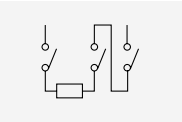

3pole for DC contact

Rating

Contactor type			MC-185a		MC-225a	
			kW	A	kW	A
AC duty	AC3	200/240V	55	185	75	225
		380/440V	90	185	132	225
		500/550V	110	180	132	200
		690V	110	120	140	150
		1000V	132	90	132	90
	AC4	200/240V	37	150	45	180
		380/440V	75	150	90	180
	AC1		-	300	-	350
DC1 duty (L/R=1ms)	2-pole in series	24V	-	180	-	220
		48V	-	180	-	180
		110V	-	150	-	150
	3-pole in series	24V	-	180	-	220
		48V	-	180	-	220
		110V	-	180	-	220
DC3, 5 duty (L/R=15ms)	2-pole in series	24V	-	180	-	220
		48V	-	150	-	150
		110V	-	120	-	120
	3-pole in series	24V	-	180	-	220
		48V	-	180	-	220
		110V	-	150	-	150
Directly mountable overload relay			MT-225			
Conductor size (Solid, stranded) (Max number of conductors: 2)		AWG	1~4/0		0~300	
		mm^2	50~95		50~150	
Conductor type			75°C Cu stranded wire			

Coil voltage, AC/DC common

Nominal (ordering) voltage	AC 50/60Hz	DC
24V	24 - 25V	24V
48V	48 - 50V	48V
100/200V	100 - 240V	100 - 220V
300V	265 - 347V	-
400V	380 - 450V	-
500V	440 - 575V	-

Certification
• CE (IEC) • UL508 • CCC

Accessories

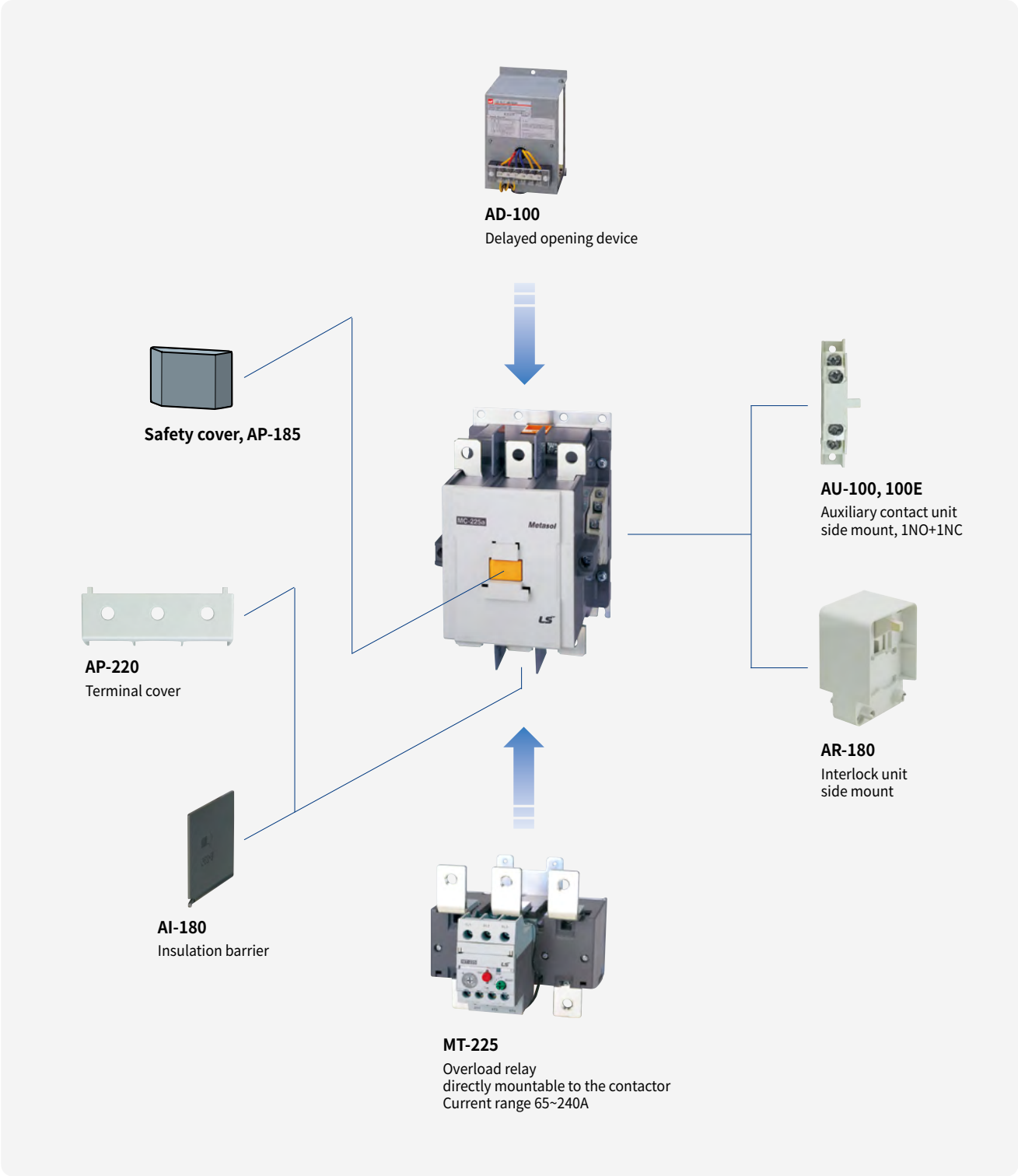

400AF

- 3-pole main contact
- AC/DC general use coil
- Wide coil operating voltage
- Screw mount
- 2NO2NC auxiliary contacts built-in as standard
- Side mount accessories available
- IP00 rated

MC-400a

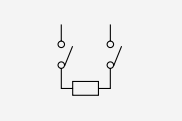

2pole for DC contact

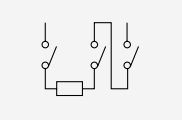

3pole for DC contact

Rating

Contactor type			MC-265a		MC-330a		MC-400a	
			kW	A	kW	A	kW	A
AC duty	AC3	200/240V	80	265	90	330	125	400
		380/440V	147	265	160	330	200	400
		500/550V	147	225	160	280	225	350
		690V	160	185	200	220	250	300
		1000V	147	105	147	105	147	105
	AC4	200/240V	50	200	55	220	75	300
		380/440V	102	200	110	220	150	300
	AC1		-	400	-	500	-	520
DC1 duty (L/R=1ms)	2-pole in series	24V	-	220	-	300	-	400
		48V	-	180	-	240	-	240
		110V	-	150	-	200	-	200
	3-pole in series	24V	-	220	-	300	-	400
		48V	-	220	-	300	-	400
		110V	-	220	-	300	-	400
DC3, 5 duty (L/R=15ms)	2-pole in series	24V	-	220	-	300	-	400
		48V	-	150	-	200	-	200
		110V	-	120	-	150	-	150
	3-pole in series	24V	-	220	-	300	-	400
		48V	-	220	-	280	-	280
		110V	-	150	-	200	-	200
Directly mountable overload relay			MT-400					
Conductor size (Solid, stranded) (Max number of conductors: 2)		AWG	3/0~500		4/0~500		350~700	
		mm^2	95~240		95~240		185~370	
Conductor type			75°C Cu stranded wire					

Coil voltage

Nominal (ordering) voltage	AC 50/60Hz	DC
100V / 200V	100 - 240V	100 - 220V
300V	265 - 347V	-
400V	380 - 450V	-
500V	440 - 575V	
24V	-	24V

Certification
• CE (IEC) • UL508 • CCC

Accessories

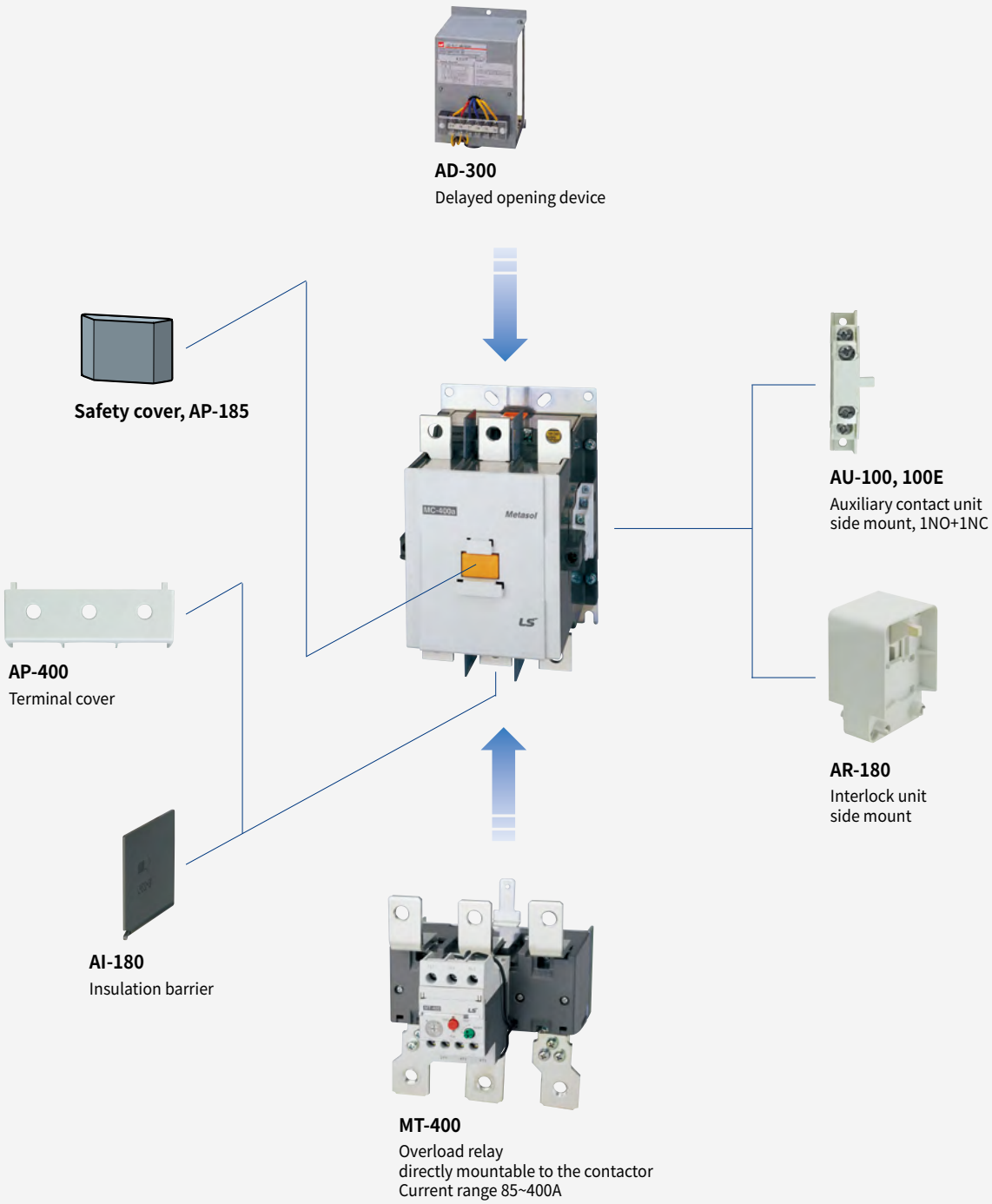

800AF

- 3-pole main contact
- AC/DC general use coil
- Wide coil operating voltage
- Screw mount
- 2NO2NC auxiliary contacts built-in as standard
- Top/side mount accessories available
- Overload relays available
- IP00 rated

MC-800a

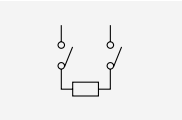

2pole for DC contact

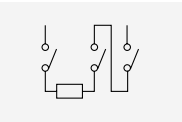

3pole for DC contact

Rating

Contactor type			MC-500a		MC-630a		MC-800a	
			kW	A	kW	A	kW	A
AC duty	AC3	200/240V	147	500	190	630	220	800
		380/440V	265	500	330	630	440	800
		500/550V	265	400	330	500	500	720
		690V	300	380	400	420	500	630
		1000V	280	220	280	220	280	220
	AC4	200/240V	90	350	110	400	160	630
		380/440V	176	350	200	400	300	630
	AC1		-	700	-	900	-	1050
DC1 duty (L/R=1ms)	2-pole in series	24V	-	400	-	630	-	800
		48V	-	240	-	630	-	800
		110V	-	200	-	630	-	630
	3-pole in series	24V	-	400	-	630	-	800
		48V	-	400	-	630	-	800
		110V	-	400	-	630	-	800
DC3, 5 duty (L/R=15ms)	2-pole in series	24V	-	400	-	630	-	800
		48V	-	200	-	630	-	630
		110V	-	150	-	630	-	630
	3-pole in series	24V	-	400	-	630	-	800
		48V	-	280	-	630	-	630
		110V	-	200	-	630	-	630
Directly mountable overload relay			MT-800					
Conductor size (Solid, stranded) (Max number of conductors: 2)		AWG	350~800		600~2000		1700~Busbar	
		mm²	185~480		-		-	
Conductor type			75°C Cu stranded wire					

Coil voltage, AC/DC common

Nominal (ordering) voltage	AC 50/60Hz	DC
100V	100 - 127V	100 - 110V
200V	200 - 240V	200 - 220V
300V	265 - 347V	-
400V	380 - 450V	-
500V	440 - 575V	-

Certification
• CE (IEC) • UL508 • CCC

Accessories

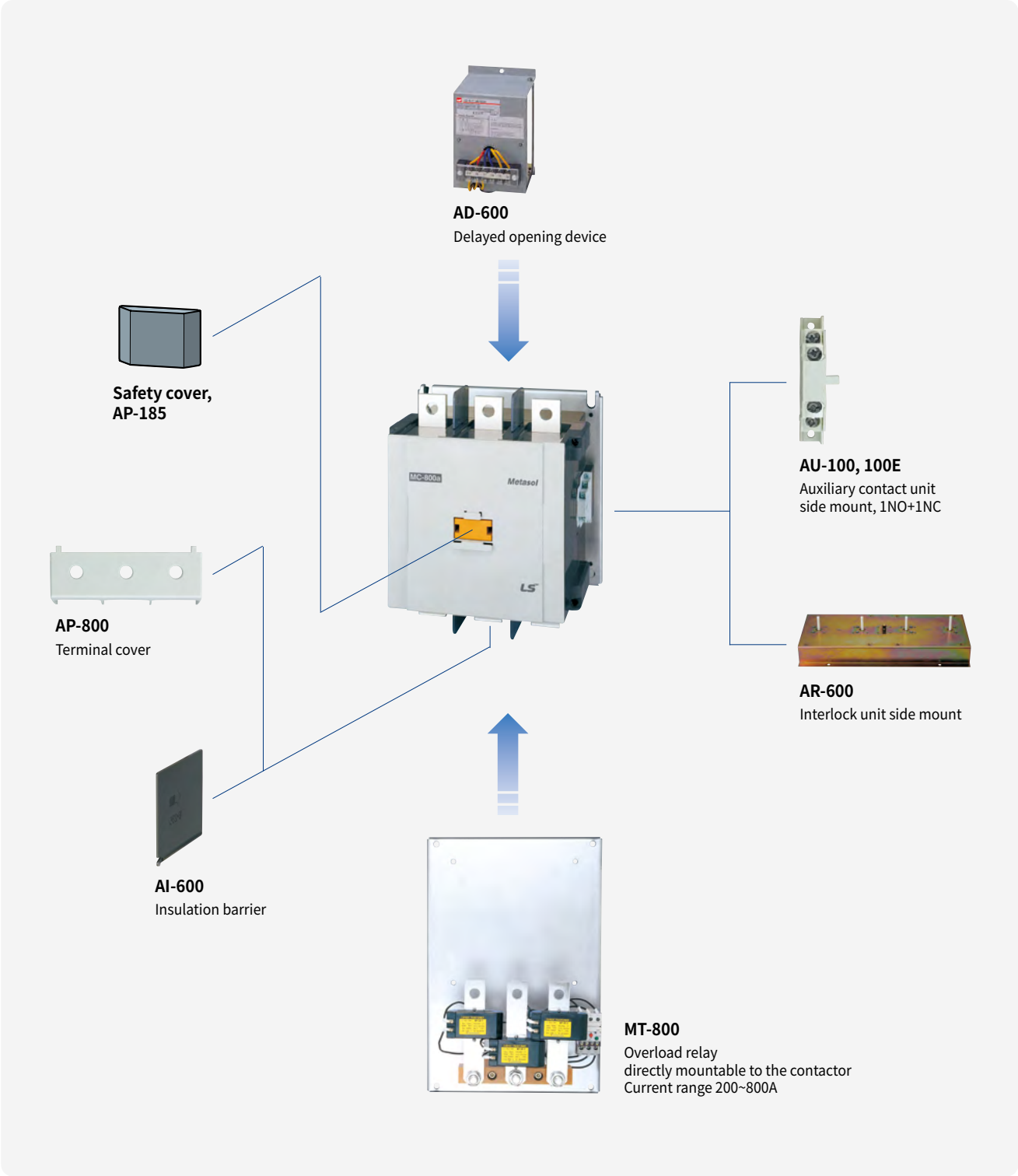

1260AF

- 3-pole main contact
- AC/DC general use coil
- Wide coil operating voltage
- Screw mount
- 2NO2NC auxiliary contacts built-in as standard
- Side mount accessories available
- IP00 rated

MC-1260a

Rating

Contactor type			MC-1260a	
			kW	A
AC duty	AC3	200/240V	-	-
		380/440V	-	-
		500/550V	-	-
		690V	-	-
		1000V	-	-
	AC1		-	1260
Conductor size (Solid, stranded) (mm)		Busbar	50 x 10 x 2ea	
Conductor type			Busbar	

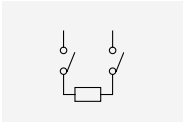

2pole for DC contact

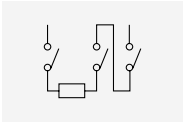

3pole for DC contact

Coil voltage, AC/DC common

Nominal (ordering) voltage	AC 50/60Hz	DC
100V / 200V	100 - 240V	100 - 220V

Certification
• CE (IEC) • UL, UL/cUL

Accessories

AU-100, 100E
Auxiliary contact unit
side mount, 1NO+1NC

AI-800
Insulation barrier

2650AF

- 3-pole main contact
- AC/DC general use coil
- Wide coil operating voltage
- Screw mount
- 2NO2NC auxiliary contacts built-in as standard
- Side mount accessories available
- IP00 rated

MC-2650a

Rating

Contactor type			MC-1400a		MC-1700a		MC-2100a		MC-2650a	
			kW	A	kW	A	kW	A	kW	A
AC duty	AC3	200/240V	290	860	310	1050	-	-	-	-
		380/440V	550	860	700	1050	900	1450	-	-
		500/550V	-	-	-	-	-	-	-	-
		690V	800	800	1000	950	-	-	-	-
		1000V	-	-	-	-	-	-	-	-
	AC1		-	1400	-	1700	-	2100	-	2650
Conductor size (Solid, stranded) (mm)		Busbar	100 x 5 x 2ea		100 x 5 x 3ea		100 x 5 x 4ea		100 x 10 x 3ea	
Conductor type			Busbar							

Coil voltage, AC/DC common

Nominal (ordering) voltage	AC 50/60Hz	DC
100V / 200V	100 - 240V	100 - 220V

Certification
• CE (IEC) • UL60947-4-1 • CCC

Accessories

AU-100, 100E
Auxiliary contact unit
side mount, 1NO+1NC

Insulation barrier
AI-2100 (MC-1400a~2100a)
AI-2650 (MC-2650a)

Accessories 1260AF

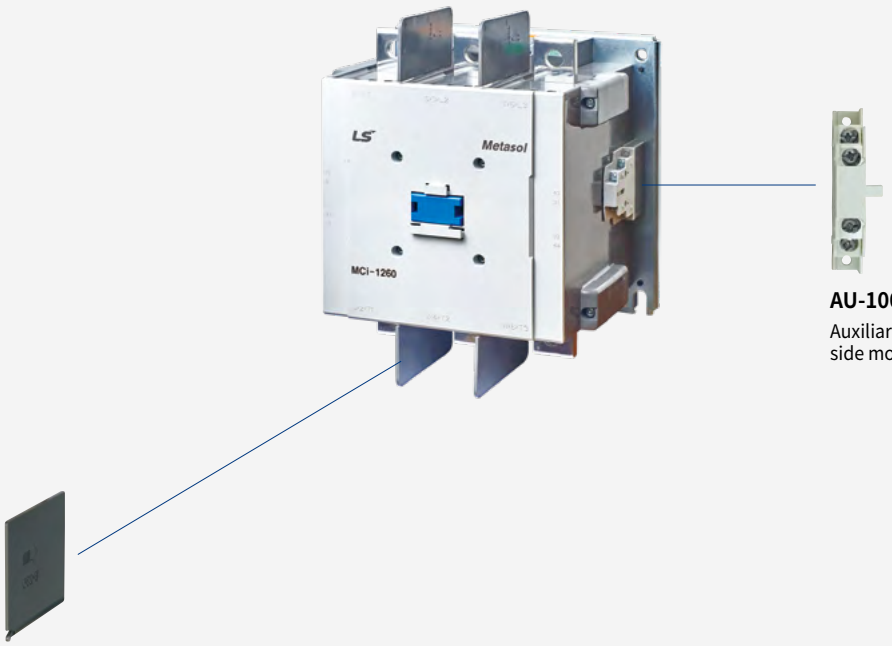

AU-100, 100E
Auxiliary contact unit
side mount, 1NO+1NC

AI-1260
Insulation barrier

Accessories 2650AF

AU-100, 100E

Auxiliary contact unit
side mount, 1NO+1NC

Insulation barrier

AI-2650

Motor starters

Features

- Open direct motor starter
- 3-pole (NO) main contact
- Finger-proof design
- DIN rail or screw mount
- AC or DC control contactor selectable
- Front/side mount accessories available
- Overload relay is directly mounted to the contactor
- IP20 rated

Rating

Frame size				18AF				22AF			
Type				MC-6a	MC-9a	MC-12a	MC-18a	MC-9b	MC-12b	MC-18b	MC-22b
Number of poles				3				3			
Rated operational voltage (Ue)				690V				690V			
Degree of pollution (IEC60529)				IP20				IP20			
Rated operational current Ie (θ≤40°C)	AC-1	Ue max 690V	[A]	25	25	25	32	25	27	40	45
	AC-3	200/240V	[A]	9	11	13	18	11	13	18	22
		380/400V	[A]	7	9	12	18	9	12	18	22
		415V	[A]	7	9	12	18	9	12	18	22
		440V	[A]	7	9	12	18	9	12	18	22
		500V	[A]	6	7	12	13	7	12	13	20
		690V	[A]	4	5	9	9	6	9	9	18
		1000V	[A]	-	-	-	-	-	-	-	-
Rated operational power (θ≤40°C)	AC-3	200/240V	[kW]	2.2	2.5	3.5	4.5	2.5	3.5	4.5	5.5
		380/400V	[kW]	3	4	5.5	7.5	4	5.5	7.5	11
		415V	[kW]	3	4	5.5	7.5	4	5.5	7.5	11
		440V	[kW]	3	4	5.5	7.5	4	5.5	7.5	11
		500V	[kW]	3	4	7.5	7.5	4	7.5	7.5	15
		690V	[kW]	3	4	7.5	7.5	4	7.5	7.5	15
		1000V	[kW]	-	-	-	-	-	-	-	-
According to IEC60947-4-1	Rated making capacity AC-3			70	90	120	180	90	120	180	220
	Rated breaking capacity AC-3			56	72	96	144	72	96	144	176
Electrical life for Ie / AC-3 Max in millions of operating cycles				2.5	2.5	2.5	2.5	2.5	2.5	2.5	2.5
Maximum operating rate in operating cycles per hour				1800	1800	1800	1800	1800	1800	1800	1800

Usable devices in the combination starter

Contactors		18AF				22AF			
with AC or DC control coil		MC-6a	MC-9a	MC-12a	MC-18a	MC-9b	MC-12b	MC-18b	MC-22b
with coil in common use for AC and DC		-	-	-	-	-	-	-	-
Thermal overload relays		**18AF**				**22AF**			
Class 10	Differential type	MT-12/3K				MT-32/3K			
	Non-differential type	MT-12/3H				MT-32/3H			
	Non-differential type(2-heater)	MT-12/2H				MT-32/2H			
Class 20	Differential type	MT-12/3D				MT-32/3D			
Setting range A		0.1~18A				0.1~40A			

	40AF		65AF		100AF		
	MC-32a	MC-40a	MC-50a	MC-65a	MC-75a	MC-85a	MC-100a
	3		3		3		
	690V		690V		690V		
	IP20		IP20		IP20		
	55	60	100	115	125	135	160
	32	40	55	65	75	85	105
	32	40	50	65	75	85	105
	32	40	50	65	75	85	105
	32	40	50	65	75	85	105
	28	32	43	60	64	75	85
	20	23	28	35	42	45	65
	17	17	23	23	28	28	28
	7.5	11	15	18.5	22	25	30
	15	18.5	22	30	37	45	55
	15	18.5	22	30	37	45	55
	15	18.5	22	30	37	45	55
	18.5	22	30	33	37	45	55
	18.5	22	30	33	37	45	55
	22	22	30	30	37	37	37
	320	400	500	650	750	850	1050
	256	320	400	520	600	650	840
	2	2	2	2	2	2	2
	1800	1800	1200	1200	1200	1200	1200

	40AF		65AF		100AF		
	MC-32a	MC-40a	MC-50a	MC-65a	MC-75a	MC-85a	MC-100a
	-	-	-	-	-	-	-
	40AF		65AF		100AF		
	MT-32/3K		MT-63/3K		MT-95/3K		
	MT-32/3H		MT-63/3H		MT-95/3H		
	MT-32/2H		MT-63/2H		MT-95/2H		
	MT-32/3D		MT-63/3D		MT-95/3D		
	0.1~40A		4~65A		7~100A		

Motor starters

Features

- Open direct motor starter
- 3-pole (NO) main contacts
- Screw mount
- AC/DC general use control contactor (from 225AF)
- Additional accessories available
- Overload relay is directly mounted to the contactor
- IP20 rated

Rating

Frame size				150AF		225AF	
Type				MS-130a	MS-150a	MS-185a	MS-225a
Number of poles				3		3	
Rated operational voltage (Ue)				690V		690V	
Degree of pollution (IEC60529)				IP20		IP20	
Rated operational current Ie (θ≤40°C)	AC-1	Ue max 690V	[A]	200	250	300	350
	AC-3	200/240V	[A]	130	150	185	225
		380/400V	[A]	130	150	185	225
		415V	[A]	130	150	185	225
		440V	[A]	130	150	185	225
		500V	[A]	90	100	180	200
		690V	[A]	60	60	120	150
		1000V	[A]	50	50	90	90
Rated operational power (θ≤40°C)	AC-3	200/240V	[kW]	37	45	55	75
		380/400V	[kW]	60	75	90	132
		415V	[kW]	60	75	90	132
		440V	[kW]	60	75	90	132
		500V	[kW]	60	70	110	132
		690V	[kW]	55	55	110	140
		1000V	[kW]	75	90	132	132
According to IEC60947-4-1	Rated making capacity AC-3			1200	1500	1850	2250
	Rated breaking capacity AC-3			960	1200	1480	1800
Electrical life for Ie / AC-3 Max in millions of operating cycles				1	1	1	1
Maximum operating rate in operating cycles per hour				1200	1200	1200	1200

Usable devices in the combination starter

Contactors		150AF		225AF	
with AC or DC control coil		MC-130a	MC-150a	-	-
with coil in common use for AC and DC		-	-	MC-185a	MC-225a
Thermal overload relays		**150AF**		**225AF**	
Class 10	Differential type	MT-150/3K		MT-225/3K	
	Non-differential type	MT-150/3H		MT-225/3H	
	Non-differential type(2-heater)	MT-150/2H		MT-225/2H	
Class 20	Differential type	MT-150/3D		MT-225/3D	
Setting range A		34~150A		65~240A	

	400AF			800AF		
	MS-265a	MS-330a	MS-400a	MS-500a	MS-630a	MS-800a
	3			3		
	690V			690V		
	IP20			IP20		
	400	500	520	700	900	1050
	265	330	400	500	630	800
	265	330	400	500	630	800
	265	330	400	500	630	800
	265	330	400	500	630	800
	225	280	350	400	500	720
	185	220	300	380	420	630
	105	105	105	220	220	220
	80	90	125	147	190	220
	147	160	200	265	330	440
	147	160	200	265	330	440
	147	160	200	265	330	440
	147	160	225	265	330	500
	160	200	250	300	400	500
	147	147	147	280	280	280
	2650	3300	4000	5000	6300	8000
	2120	2640	3200	4000	5040	6400
	1	1	0.5	0.5	0.5	0.5
	1200	1200	1200	1200	1200	1200

	400AF			800AF		
	-	-	-	-	-	-
	MC-265a	MC-330a	MC-400a	MC-500a	MC-630a	MC-800a
	400AF			800AF		
	MT-400/3K MT-400/3H MT-400/2H			MT-800/3K MT-800/3H MT-800/2H		
	MT-400/3D			MT-800/3D		
	85~400A			200~800A		

Reversing contactors

Features

- Two AC or DC control contactors are mechanically and electrically interlocked
- 3-pole (NO) main contact in each contactor
- Finger-proof design
- DIN rail or screw mount
- Front/side mount accessories available
- Overload relay can be directly mounted to the contactor
- Use interval time over 25ms
- IP20 rated

Circuit diagram

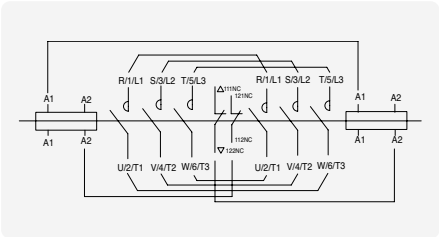

Rating

MC-40a/R

MC-65a/R

MC-100a/R

Type	AC-3 duty							Current (AC3)	Weight (AC control)
	200~240V	380~400V	415V	440V	500V	690V	1000V	440V	
	kW	kW	kW	kW	kW	kW	kW	A	
MC-6a/R	2.2	3	3	3	3	3	-	7	0.63kg
MC-9a/R	2.5	4	4	4	4	4	-	9	0.63kg
MC-12a/R	3.5	5.5	5.5	5.5	7.5	7.5	-	12	0.63kg
MC-18a/R	4.5	7.5	7.5	7.5	7.5	7.5	-	18	0.63kg
MC-9b/R	2.5	4	4	4	4	4	-	9	0.75kg
MC-12b/R	3.5	5.5	5.5	5.5	7.5	7.5	-	12	0.75kg
MC-18b/R	4.5	7.5	7.5	7.5	7.5	7.5	-	18	0.75kg
MC-22b/R	5.5	11	11	11	15	15	-	22	0.75kg
MC-32a/R	7.5	15	15	15	18.5	18.5	22	32	0.95kg
MC-40a/R	11	18.5	18.5	18.5	22	22	22	40	0.95kg
MC-50a/R	15	22	22	22	30	30	30	50	1.9kg
MC-65a/R	18.5	30	30	30	33	33	30	65	1.9kg
MC-75a/R	22	37	37	37	37	37	37	75	3.4kg
MC-85a/R	25	45	45	45	45	45	37	85	3.4kg
MC-100a/R	30	55	55	55	55	55	37	105	3.4kg

Coil voltage

AC	50Hz	24, 32, 42, 48, 80, 100, 110, 220, 230, 240, 380, 400, 500, 550V
	60Hz	24, 48, 100, 110, 120, 200, 208, 220, 230, 240, 277, 380, 480, 600V
DC		12, 20, 24, 48, 60, 80, 100, 110, 125, 200, 220, 250V

Certification
• CE(IEC) • UL508 • CCC

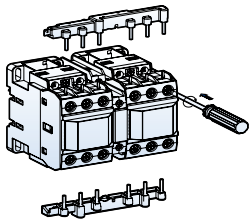

Description

- 3-pole main contact
- Mechanically interlocked
- AC/DC general use coil built (from MC-185a/R)
- Wide coil operating voltage
- Screw mount
- 4NO4NC auxiliary contacts built-in
- Top/side mount accessories available
- Use interval time over 50ms
- IP20 rated

Rating

Type	AC-3 duty							Current (AC3)	Weight (AC control)
	200~240V	380~400V	415V	440V	500V	690V	1000V	440V	
	kW	kW	kW	kW	kW	kW	kW	A	
MC-130a/R	37	60	60	60	60	55	75	130	4.3kg
MC-150a/R	45	75	75	75	70	55	75	150	4.3kg
MC-185a/R	55	90	90	90	110	110	132	185	13kg
MC-225a/R	75	132	132	132	132	140	132	225	13kg
MC-265a/R	80	147	147	147	147	160	147	265	21.4kg
MC-330a/R	90	160	160	160	160	200	147	330	21.4kg
MC-400a/R	125	200	200	225	225	250	147	400	21.4kg
MC-500a/R	147	265	265	265	265	300	280	500	60kg
MC-630a/R	190	330	330	330	330	400	280	630	60kg
MC-800a/R	220	440	440	440	440	500	280	800	60kg

Coil voltage

For MC130a/ R and MC-150a/R	AC	50/60Hz	24, 48, 100~240, 110~120, 220~240, 300, 380~440, 500V
	DC		24, 48, 70~110, 100~220, 110, 220V

For MC-185a/R ~ MC-800a/R	- 24, 48, 100/200, 300, 400, 500V for types MC-185a/R, 225a/R - 100/200, 300, 400, 500V for types MC-265a/R, 330a/R, 400a/R - 100, 200, 300, 400, 500V for types MC-500a/R, 600a/R, 800a/R

Nominal(ordering) voltage	AC 50/60Hz	DC
24V	24 - 25V	24V
48V	48 - 50V	48V
100V	100 - 127V	100 - 110V
200V	200 - 240V	200 - 220V
100/200V	100 - 240V	100 - 220V
300V	265 - 347V	-
400V	380 - 450V	-
500V	440 - 575V	-

LED voltage monitoring contactor

Features

Observe coil voltage in real-time without additional equipment for protecting coil burn out due to under and over voltage

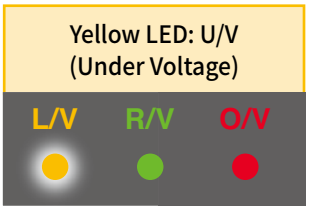

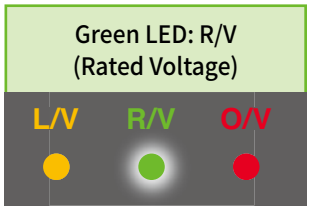

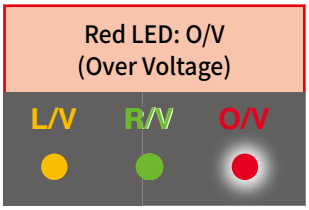

Coil voltage

Type	Coil voltage	LED indicator status lights		
		Under voltage (Yellow)	Rated voltage (Green)	Over voltage (Red)
MC-130a, MC 150a	110V	~80V	80~130V	130V~
	220V	~160V	160~260V	260V~
	400V	~330V	330~480V	280V~
MC-185a, MC-225a	110V	~80V	80~130V	130V~
	220V	~160V	160~260V	260V~
	400V	~330V	330~480V	280V~
MC-265a, MC-330a MC-400a	110V	~80V	80~130V	130V~
	220V	~160V	160~260V	260V~
	400V	~330V	330~480V	280V~
MC-500a, MC-630a MC-800a	110V	~80V	80~130V	130V~
	220V	~160V	160~260V	260V~

* The accuracy of LED indicator status lights is ±5%.

Description

- 4, 6 and 8-pole units
- AC/DC control voltage
- 16A continuous current, Ith
- DIN rail or screw mount
- IP20 rated

MR-4

MR-6

MR-8

Selection

Poles	Composition	Types	Notes
4 pole	4NO 3NO1NC 2NO2NC 1NO3NC 4NC	MR-4	Additional auxiliary contacts can be mounted on the relays.
6 pole	6NO 5NO1NC 4NO2NC 3NO3NC 2NO4NC	MR-6	UA-2 is mounted on the MR-4.
8 pole	8NO 7NO1NC 6NO2NC 5NO3NC 4NO4NC	MR-8	UA-4 is mounted on the MR-4.

Note: Product indicated " low " is for low current applications.

Rating

Rated insulation voltage (Ui)				AC 690V			
Continuous current (Ith)				16A			
Operating cycle				1800 operations/hour			
Endurance	Mechanical life time			10 mil. operations			
	Electrical life time			0.25 mil. operations			
Type				MR-4	MR-6		MR-8	
	AC-15	Rated current (A)	120V	6	6		6	
			240V	3	3		3	
			380V	1.9	1.9		1.9	
			480V	1.5	1.5		1.5	
			500V	1.4	1.4		1.4	
			600V	1.2	1.2		1.2	
				MR-4	MR-4	UA-2	MR-4	UA-4
	DC-13	Rated current (A)	125V	1.1	1.1	0.55	1.1	0.55
			250V	0.55	0.55	0.27	0.55	0.27
			400V	0.31	0.31	0.15	0.31	0.15
			500V	0.27	0.27	0.13	0.27	0.13
			600V	0.2	0.2	0.1	0.2	0.1
Minimum rated through current				DC 24V 10mA				

Coil voltage

AC	50Hz	24, 32, 42, 48, 65, 80, 100, 110, 120, 220, 230, 240, 380, 400, 500, 550V
	60Hz	24, 48, 110, 120, 200, 208, 220, 230, 240, 277, 380, 480, 600V
DC		12, 20, 24, 30, 48, 60, 80, 100, 110, 125, 200, 220, 250V
Voltage limit		85%~110%

Note: See page 22, 23 for details.
* Check polarity when wiring control power (+ Positive and - Negative)

Contactor relays for micro current

Features

- 2, 4 and 8-pole units
- AC/DC control voltage
- 0.5 mil. operations, 2.5 mil. operations
- DIN rail (35mm) or screw mount
- IP20 rated

* Do not place strong magnets around the main circuit.

MR-4E

MR-8E

UA-4E

UA-1E

Type

Number of poles	Contact configuration		Types	Notes
	Micro contact	Normal contact		
2 pole	1a1b	-	UA-1E AU-100E	Auxiliary contact unit (UA-1E)
4 Pole	2a 1a1b 2b	2a 1a1b 2b	MR-4E or UA-4E	Auxiliary relay (MR-4E) or Auxiliary contact unit (UA-4E)
8 Pole	4a 3a1b 2a2b 1a3b 4b	4a 3a1b 2a2b 1a3b 4b	MR-8E (MR-4E + UA-4E)	Auxiliary relay (MR-4E) and Auxiliary contact unit (UA-4E)

* MR-4E UA-4E 'Negative sides of both sides' is the contact for microcurrent.
* UA-1E is applicable to 150AF or less. (Above 225AF, AU-100E is available.)
* Please note that contact welding may occur when a high voltage is applied to the contact for micro current, not the rated voltage.

Rating

		Micro contact	Normal contact
Rated operational voltage (Ue)		AC 130V, DC 180V MAX.	AC 600V
Continuous current (Ith)		1A	16A
Switching current		0.7A MAX.	6A
Contact capacity		10VA (10W) Less	720VA
Rated insulation voltage (Ui)		DC 200V	AC 690V
Operating cycle (AC1)		1800 operations/hour	1800 operations/hour
Endurance	Mechanical	2.5 mil. operations	10 mil. operations
	Electrical	0.5 mil. operations	0.25 mil. operations
Minimum rated through current		DC 5V 0.5mA	DC 24V 10mA
Contact reliability		1×10^{-8}	4×10^{-6}

Coil voltage

AC	50Hz	24, 32, 36, 42, 48, 65, 80, 100, 110, 120, 220, 230, 240, 380, 400, 415, 440, 500, 550V
	60Hz	24, 48, 110, 120, 200, 208, 220, 230, 240, 277, 380, 440, 480, 600V
DC		12, 20, 24, 30, 48, 60, 80, 100, 110, 125, 200, 220, 250V
Temperature Range		85%~110%

Note: 1. Refer to Operating Coil Rating and Characteristics data (22AF) on page 22 for coil specifications.
2. For DC type products, be sure to wire the polarity of the + and - when wiring the coil terminals.

Contact configuration

2a+2a

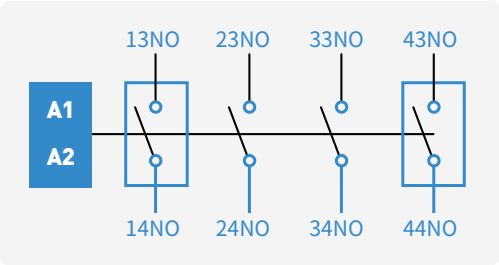

2a+1a1b

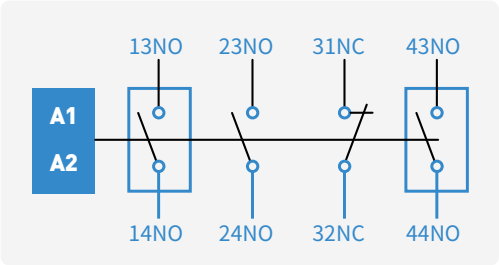

2a+2b

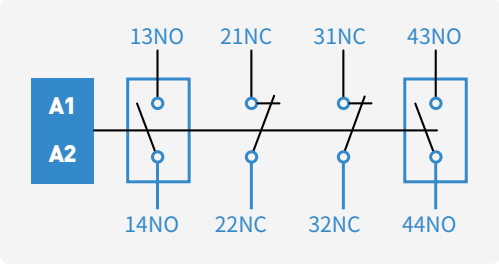

1a1b+2a

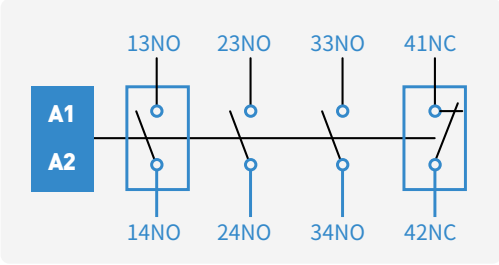

1a1b+1a1b

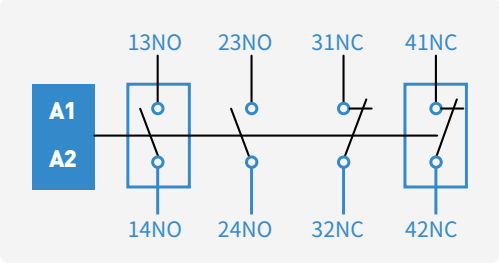

1a1b+2b

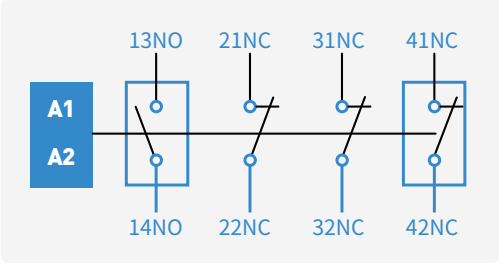

2b+2a

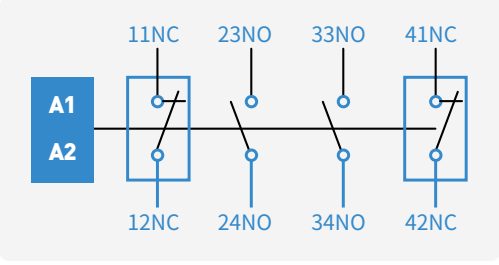

2b+1a1b

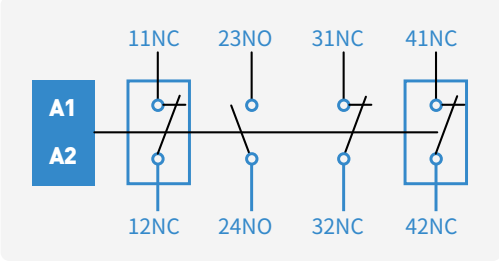

2b+2b

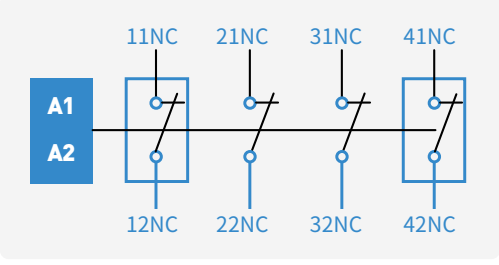

* □ is micro contact.

Latching contactors

6~150AF

- 3-pole main contact
- Mechanically latched
- Finger-proof design
- DIN rail or screw mount
- Side mount accessories available
- Direct mount overload relays available

Circuit diagram

MC-6a/L~150a/L

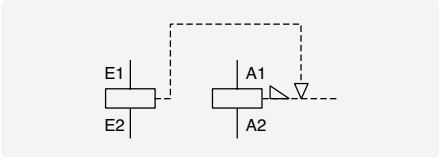

Rating

Contactor	AC3 ratings					Devices combined			
	200 / 240V	380 / 440V	500/ 550V	690V	1000V	Type	Durability (Machanical)	Operational time	Excitation time
	kW	kW	kW	kW	kW				
MC-6a/L	2.2	3	3	3	-	ML-40	0.5 mil.	Less 30ms (AC) Less 50ms (DC)	More than 100ms (AC) More than 130ms (DC)
MC-9a/L	2.5	4	4	4	-				
MC-12a/L	3.5	5.5	7.5	7.5	-				
MC-18a/L	4.5	7.5	7.5	7.5	-				
MC-9b/L	2.5	4	4	4	-				
MC-12b/L	3.5	5.5	7.5	7.5	-				
MC-18b/L	4.5	7.5	7.5	7.5	-				
MC-22b/L	5.5	11	15	15	-				
MC-32a/L	7.5	15	18.5	18.5	22				
MC-40a/L	11	18.5	22	22	22				
MC-50a/L	15	22	30	30	30	ML-65			
MC-65a/L	18.5	30	33	33	30				
MC-75a/L	22	37	37	37	37	ML-150	2.5 mil.		
MC-85a/L	25	45	45	45	37				
MC-100a/L	30	55	55	45	37				
MC-130a/L	37	60	60	55	75			Less 100ms	More than 130ms
MC-150a/L	45	75	75	55	75				

* When the open signal is input exceeding 1 second, the coil of the latch will get burned.
For MC input signals, give at least 100ms for AC coil and 250ms for DC coil.
For MC input signal voltage, use 85% to 110% of the coil rating. Contact operation can be incomplete due to insufficient input signal when low voltage is applied.

Coil voltage

AC	50/60Hz	24, 48, 100, 110, 120, 200, 220, 230, 240, 380, 400, 415, 440V
DC		24, 48, 110V

Certification
• CE(IEC) • UL508

Accessories

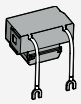

Surge unit, US
Connecting to coil terminals

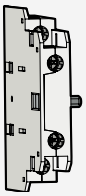

Auxiliary contact unit, UA-1
Side mount, 1NO+1NC

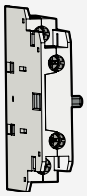

Auxiliary contact unit, UA-1
Side mount, 1NO+1NC
* It is not possible to attach " UA-1 " on the right side of product for Range MC-9b~22b.

Overload relay
MT-12 ~ MT-150

Latching contactors

185~400AF

- 3-pole main contact
- Mechanically interlocked
- AC/DC general use coil
- Wide coil operating voltage
- Screw mount
- 1NO2NC auxiliary contacts built-in as standard
- Top/side mount accessories available

Circuit diagram

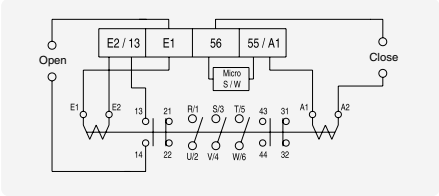

Rating

Contactor	AC3 ratings					Auxiliary contact (Standard)
	200~240V	380 ~440V	500 ~550V	690V	1000V	
MC-185a/L	55kW 185A	90kW 185A	110kW 180A	110kW 120A	132kW 90A	2NO2NC* (1NO2NC)
MC-225a/L	75kW 225A	132kW 225A	132kW 200A	140kW 150A	132kW 90A	
MC-265a/L	80kW 265A	147kW 265A	147kW 225A	160kW 185A	147kW 105A	
MC-330a/L	90kW 330A	160kW 330A	160kW 280A	200kW 220A	147kW 105A	
MC-400a/L	125kW 400A	200kW 400A	225kW 350A	250kW 300A	147kW 105A	

* 1NO contact of 2NO2NC is used in Latch and customer contact is 1NO2NC. If 2NO or higher is used, additional AU-100 attachment is required.

Coil voltage

Nominal(ordering) voltage	Operational voltage	Operation frequency
100V	AC100~127V	600 operations/hour
	DC100~125V	300 operations/hour
200V	AC200~240V	600 operations/hour
	DC200~220V	300 operations/hour

Accessories

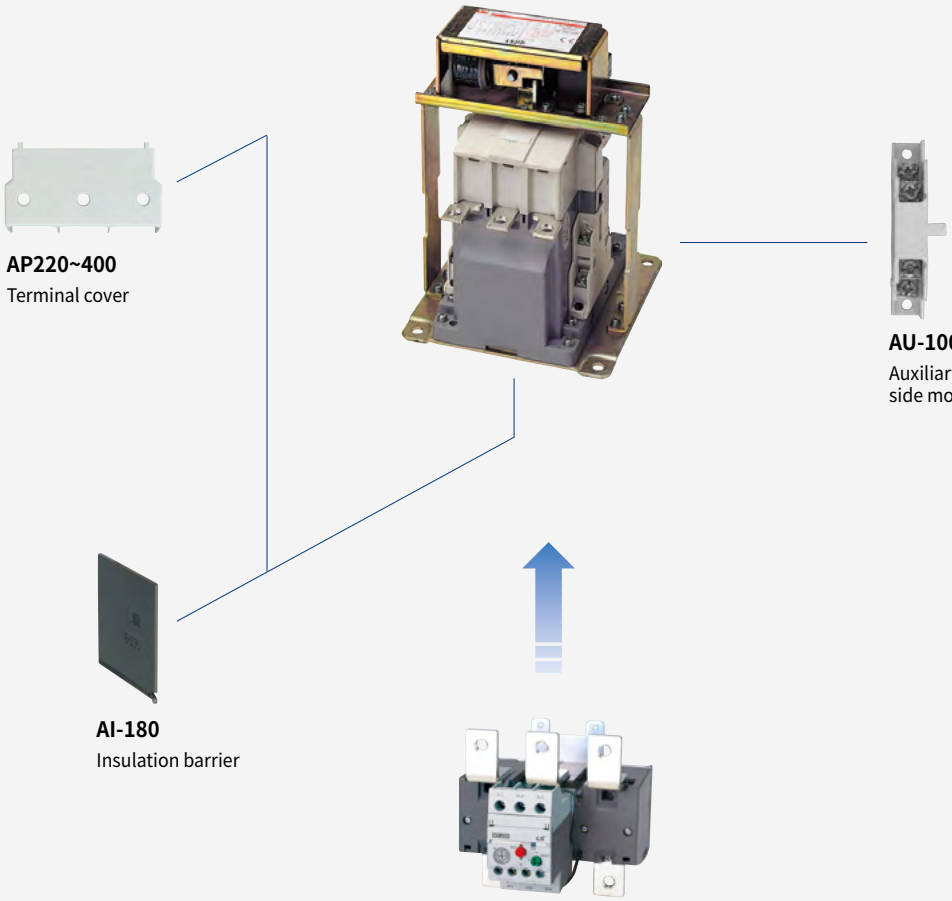

18AF

- 4-pole main contact
- Finger-proof design
- DIN rail or screw mount
- Small physical size: 44 mm wide
- Auxiliary contacts are optional
- Front/side mount accessories
- Direct mount overload relays
- IP20 rated

MC-18a/4

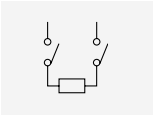

2-pole for DC contact

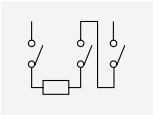

3-pole for DC contact

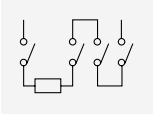

4-pole for DC contact

Rating

Contactor type			MC-6a/4		MC-9a/4		MC-12a/4		MC-18a/4	
			kW	A	kW	A	kW	A	kW	A
AC duty	AC1	200/240V	9	25	9	25	9	25	15	40
		380/440V	17	25	17	25	17	25	27	40
		500/550V	21	25	21	25	21	25	35	40
		690V	27	25	27	25	27	25	44	40
	AC3	200/240V	2.2	9	2.5	11	3.5	13	4.5	18
		380/440V	3	7	4	9	5.5	12	7.5	18
		Ith	-	25	-	25	-	25	-	40
DC1 duty (L/R=1ms)	2-pole in series	110V	-	6	-	6	-	10	-	13
		220V	-	3	-	3	-	7	-	8
	3-pole in series	110V	-	8	-	8	-	12	-	18
		220V	-	8	-	8	-	12	-	18
	4-pole in series	110V	-	10	-	10	-	15	-	20
		220V	-	10	-	10	-	12	-	20
UL rating			hp	A	hp	A	hp	A	hp	A
		220/240V	3	-	3	-	5	-	7.5	-
		440/480V	5	-	5	-	7.5	-	10	-
		550/600V	7.5	-	7.5	-	10	-	15	-
		Ith	-	25	-	25	-	25	-	32
Conductor size (Solid, stranded) (Max number of conductors: 2)		AWG	18~10		18~10		16~10		16~8	
		mm²	1.5~4		1.5~10		1.5~10		1~4	
Conductor type			65/75°C Cu-wire only							

Coil voltage

AC	50Hz	24, 32, 42, 48, 80, 100, 110, 220, 230, 240, 380, 400, 500, 550V
	60Hz	24, 48, 100, 110, 120, 200, 208, 220, 230, 240, 277, 380, 480, 600V
	50/60Hz	24, 48, 100, 110, 120, 200, 220, 230, 240, 380, 415, 440, 500, 550V
DC		12, 20, 24, 30, 48, 60, 80, 100, 110, 125, 200, 220, 250V

Certification
• CE(IEC) • UL508 • CCC

Accessories

Delayed opening device, AD-9

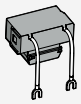

Surge unit, US
Connecting to coil terminals

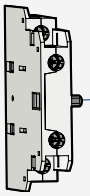

Auxiliary contact unit, UA-1
Side mount, 1NO+1NC

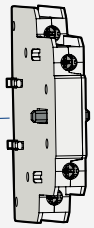

Interlock unit, UR
Side mount

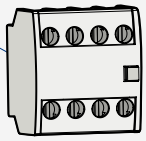

Auxiliary contact unit, UA-4
Front mount, 4P

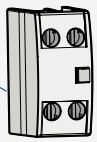

Auxiliary contact unit, UA-2
Front mount, 2P

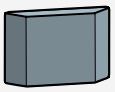

Safety cover, AP-9

4-pole contactors

22, 40AF

- 4-pole main contact
- Finger-proof design
- DIN rail or screw mount
- Auxiliary contacts are optional
- Front/side mount accessories
- Direct mount overload relays
- IP20 rated

MC-22a/4

MC-40a/4

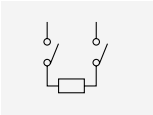

2-pole for DC contact

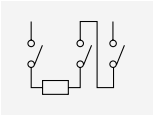

3-pole for DC contact

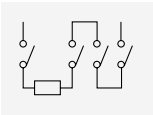

4-pole for DC contact

Rating

Contactor type			MC-22a/4		MC-32a/4		MC-40a/4	
			kW	A	kW	A	kW	A
AC duty	AC1	200/240V	15	40	18	50	22	60
		380/440V	27	40	35	50	42	60
		500/550V	35	40	43	50	52	60
		690V	44	40	55	50	66	60
	AC3	200/240V	5.5	22	7.5	32	11	40
		380/440V	11	22	15	32	18.5	40
		Ith	-	40	-	50	-	60
DC1 duty (L/R=1ms)	2-pole in series	110V	-	15	-	25	-	25
		220V	-	10	-	12	-	12
	3-pole in series	110V	-	20	-	25	-	35
		220V	-	20	-	22	-	30
	4-pole in series	110V	-	30	-	32	-	40
		220V	-	25	-	30	-	35
UL rating			hp	A	hp	A	hp	A
		220/240V	7.5	-	10	-	10	-
		440/480V	10	-	20	-	25	-
		550/600V	15	-	20	-	25	-
		Ith	-	32	-	45	-	50
Conductor size (Solid, stranded) (Max number of conductors: 2)		AWG	12~8		10~6		8~6	
		mm²	2.5~10		4~16		10~16	
Conductor type			65/75°C Cu-wire only					

Coil voltage

AC	50Hz	24, 36, 42, 48, 65, 80, 100, 110, 220, 230, 240, 380, 400, 415, 440, 500, 550, 240(wide)V
	60Hz	24, 48, 110, 208, 220, 240, 277, 380, 440, 480, 600V
	50/60Hz	24, 48, 100, 110, 120, 200, 220, 230, 240, 380, 400, 415, 440, 500, 550V
DC		12, 20, 24, 48, 60, 80, 100, 110, 125, 200, 220, 250V

Certification
• CE(IEC) • UL508 • CCC

Accessories

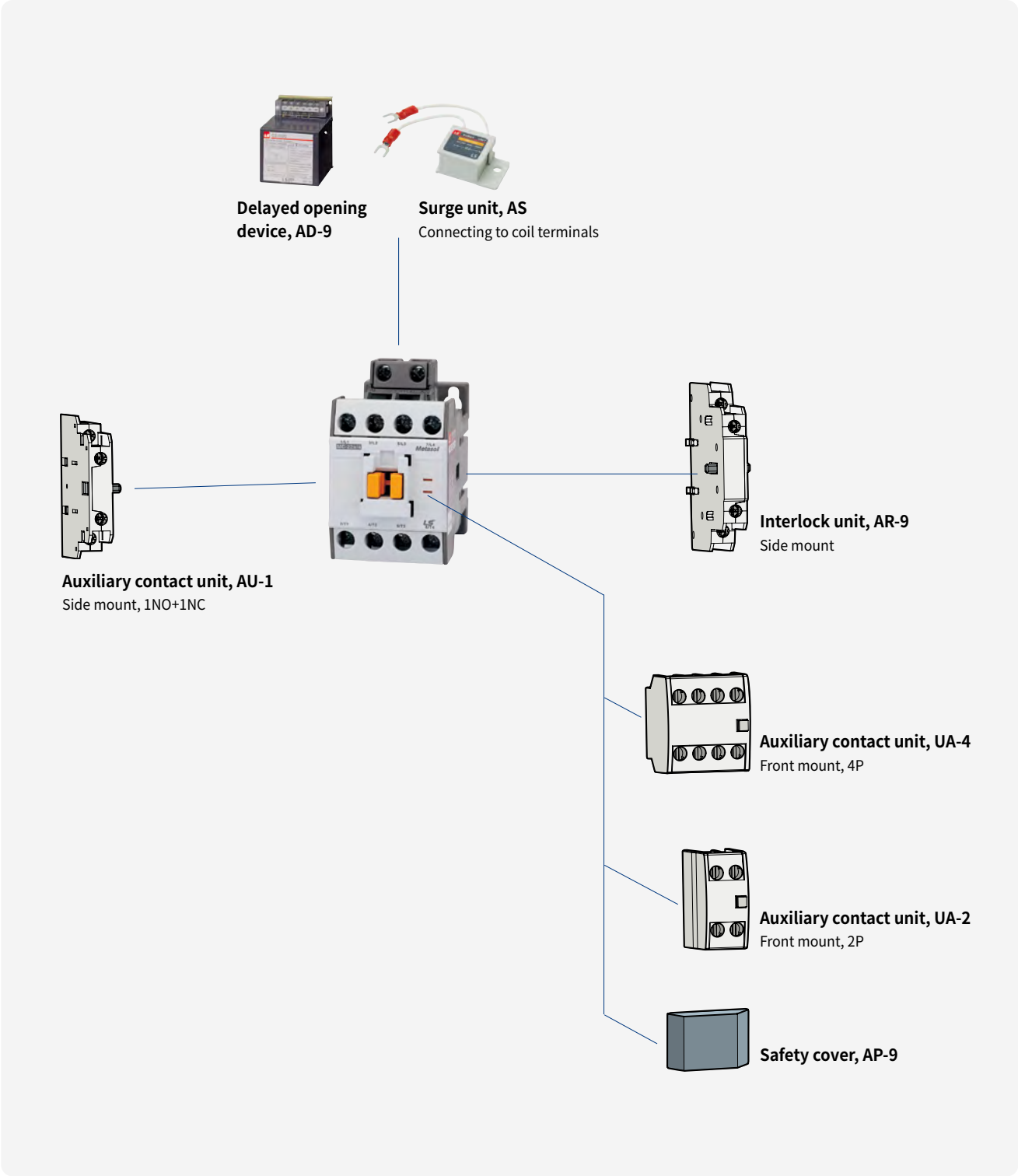

4-pole contactors

85AF

- 4-pole main contact
- Finger proof design
- DIN rail or screw mount
- Auxiliary contacts are optional
- Front/side mount accessories
- Direct mount overload relays
- IP20 rated

MC-85a/4

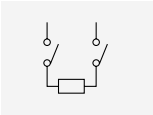

2-pole for DC contact

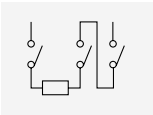

3-pole for DC contact

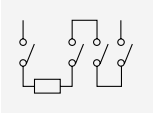

4-pole for DC contact

Rating

Contactor type			MC-50a/4		MC-65a/4		MC-75a/4		MC-85a/4	
			kW	A	kW	A	kW	A	kW	A
AC duty	AC1	200/240V	30	80	37	100	41	110	51	135
		380/440V	56	80	70	100	76	110	95	135
		500/550V	70	80	88	100	97	110	120	135
		690V	88	80	110	100	120	110	150	135
	AC3	200/240V	15	55	18.5	65	22	75	25	85
		380/440V	22	50	30	65	37	75	45	85
		Ith	-	80	-	100	-	110	-	135
DC1 duty (L/R=1ms)	2-pole in series	110V	-	35	-	35	-	50	-	50
		220V	-	15	-	15	-	20	-	20
	3-pole in series	110V	-	50	-	65	-	75	-	80
		220V	-	40	-	50	-	55	-	60
	4-pole in series	110V	-	60	-	70	-	80	-	100
		220V	-	50	-	60	-	70	-	70
UL rating			hp	A	hp	A	hp	A	hp	A
		220/240V	15	-	20	-	25	-	30	-
		440/480V	30	-	40	-	50	-	50	-
		550/600V	30	-	40	-	50	-	50	-
		Ith	-	70	-	80	-	90	-	100
Conductor size (Solid, stranded) (Max number of conductors: 2)		AWG	8~4		6~3		4~2		4~2	
		mm²	10~25		16~35		25~35		25~50	
Conductor type			65/75°C Cu-wire only							

Coil voltage

AC	50Hz	24, 48, 100, 110, 200, 220, 230, 240, 380, 400, 415, 440, 500, 550V, 240(wide)
	60Hz	24, 48, 110, 120, 208, 220, 240, 277, 380, 440, 480, 600V
	50/60Hz	24, 48, 110, 120, 220, 230, 240, 380, 400, 415, 440, 500, 550V
DC		12, 20, 24, 48, 60, 80, 100, 110, 125, 200, 220, 250V

Certification

- CE(IEC)
- UL508
- CCC

Note: For DC coil products in 85AF, 1a1b auxiliary contact is installed as standard. However, 1b contact is used for coil control. If necessary, only 1a contact should be used.

Accessories

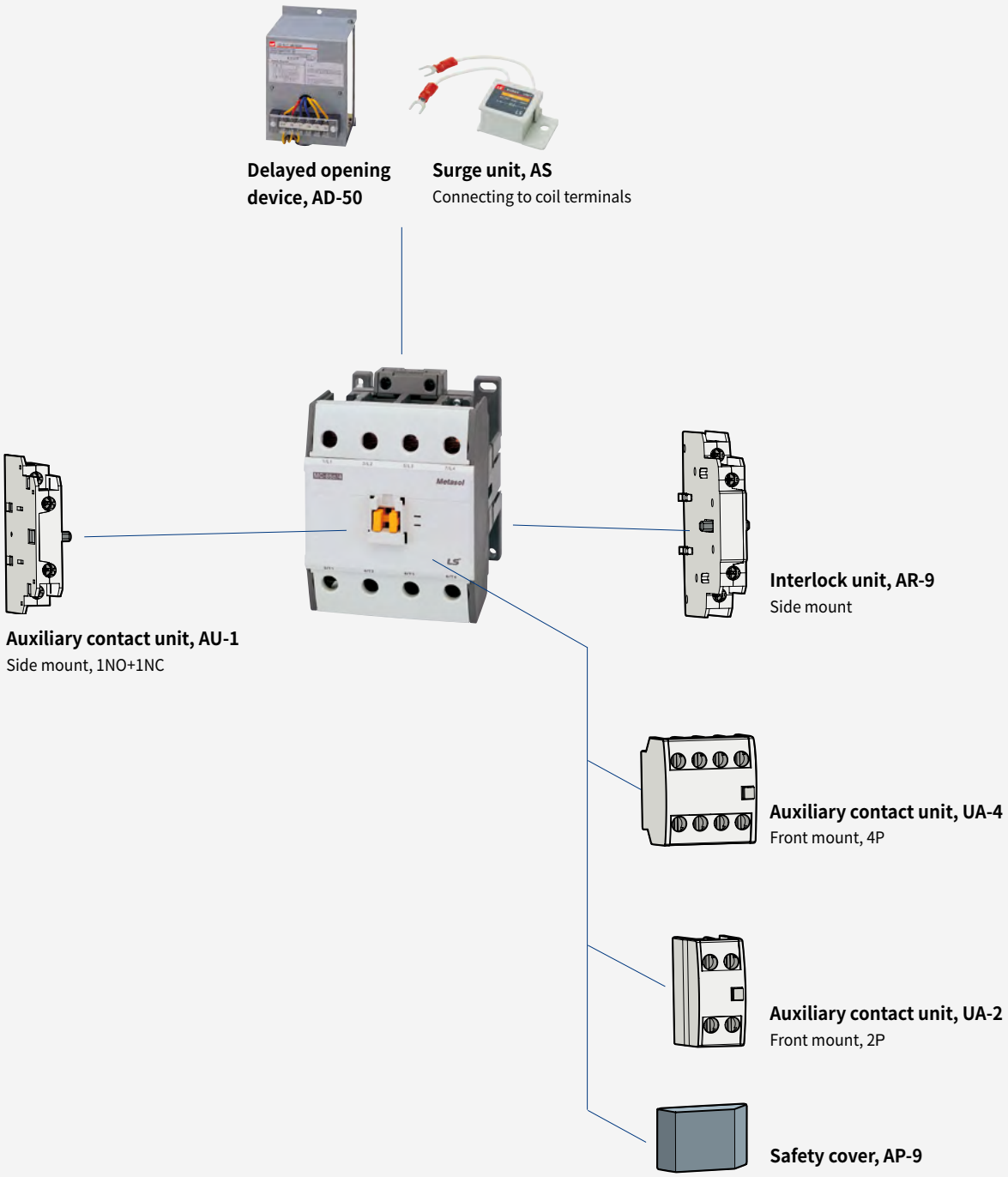

4-pole contactors

225AF

- 4-pole main contact
- AC/DC general use coil
- Wide coil operating voltage
- Screw mount
- 2NO2NC auxiliary contacts built-in as standard
- Side mount accessories
- Direct mount overload relays
- IP20 rated

MC-225a/4

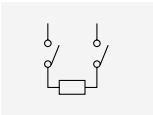

2-pole for DC contact

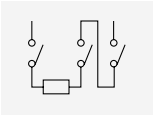

3-pole for DC contact

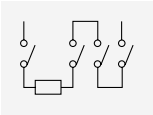

4-pole in series

Rating

Contactor type			MC-100a/4		MC-130a/4		MC-150a/4		MC-185a/4		MC-225a/4	
			kW	A	kW	A	kW	A	kW	A	kW	A
AC duty	AC1	200/240V	57	200	60	250	76	275	87	300	100	350
		380/440V	106	200	110	250	142	275	165	300	185	350
		500/550V	132	200	137	250	180	275	205	300	230	350
		690V	165	200	170	250	225	275	255	300	290	350
	AC3	200/240V	30	105	37	125	45	150	55	185	75	225
		380/440V	55	105	60	120	75	150	90	185	132	225
		Ith	-	200	-	250	-	275	-	300	-	350
DC1 duty (L/R=1ms)	2-pole in series	110V	-	80	-	80	-	100	-	150	-	150
		220V	-	50	-	50	-	100	-	150	-	150
	3-pole in series	110V	-	100	-	100	-	150	-	180	-	220
		220V	-	80	-	80	-	150	-	180	-	220
	4-pole in series	110V	-	100	-	100	-	150	-	180	-	220
		220V	-	90	-	100	-	150	-	180	-	220
UL rating			hp	A	hp	A	hp	A	hp	A	hp	A
		220/240V	30	-	40	-	50	-	60	-	75	-
		440/480V	60	-	75	-	100	-	125	-	150	-
		550/600V	60	-	75	-	100	-	125	-	150	-
		Ith	-	200	-	250	-	275	-	300	-	350
Conductor size (Solid, stranded) (Max number of conductors: 2)		AWG	6~00		3~00		3~4/0		1~4/0		0~300	
		mm²	16~70		35~70		35~95		50~95		50~150	
Conductor type			75°C Cu stranded wire									

Coil voltage, AC/DC common

Nominal(Ordering) voltage	AC 50/60Hz	DC
24V	24 - 25V	24V
48V	48 - 50V	48V
100/200V	100 - 240V	100 - 220V
300V	265 - 347V	-
400V	380 - 450V	-
500V	440 - 575V	-

Certification
• CE(IEC) • UL508 • CCC

Accessories

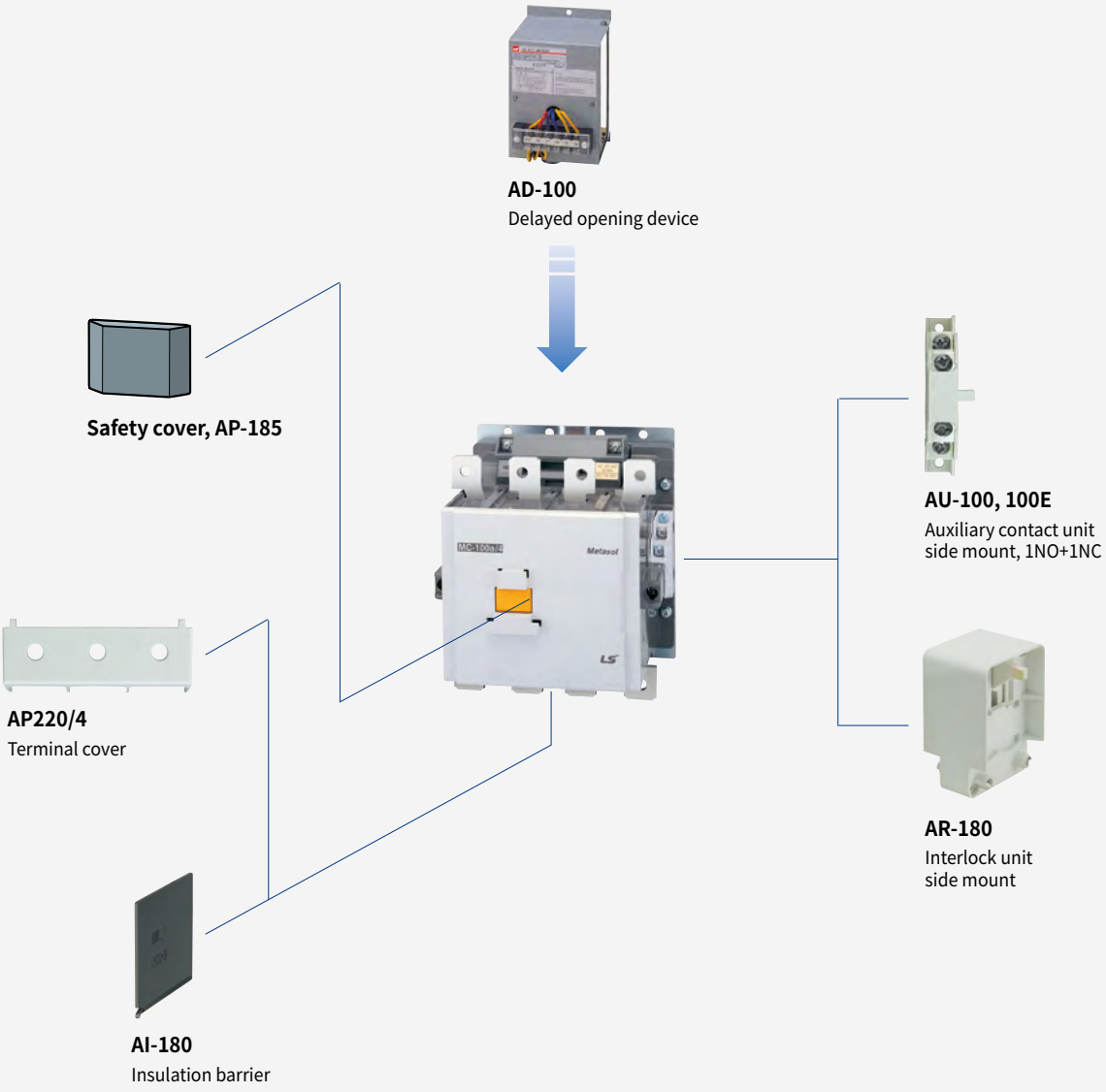

400AF

- 4-pole main contact
- AC/DC general use coil
- Wide coil operating voltage
- Screw mount
- 2NO2NC auxiliary contacts built-in as standard
- Side mount accessories
- IP20 rated

MC-400a/4

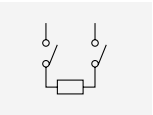

2-pole for DC contact

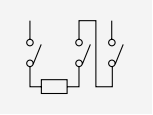

3-pole for DC contact

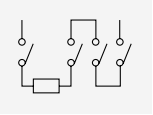

4-pole for DC contact

Rating

Contactor type			MC-265a/4		MC-330a/4		MC-400a/4	
			kW	A	kW	A	kW	A
AC duty	AC1	200/240V	115	400	135	500	160	520
		380/440V	215	400	250	500	300	520
		500/550V	265	400	315	500	375	520
		690V	335	400	390	500	470	520
	AC3	200/240V	80	265	90	330	125	400
		380/440V	147	265	160	330	200	400
		Ith	-	400	-	500	-	520
DC1 duty (L/R=1ms)	2-pole in series	110V	-	150	-	200	-	200
		220V	-	150	-	200	-	200
	3-pole in series	110V	-	220	-	300	-	400
		220V	-	220	-	300	-	300
	4-pole in series	110V	-	220	-	300	-	400
		220V	-	220	-	300	-	300
UL rating			hp	A	hp	A	hp	A
		220/240V	100	-	100	-	150	-
		440/480V	200	-	200	-	300	-
		550/600V	200	-	200	-	300	-
		Ith	-	400	-	500	-	520
Conductor size (Solid, stranded) (Max number of conductors: 2)		AWG	3/0~500		4/0~500		350~700	
		mm²	95~240		95~240		185~370	
Conductor type			75°C Cu stranded wire					

Coil voltage, AC/DC common

Nominal(Ordering) voltage	AC 50/60Hz	DC
100/200V	100 - 240V	100 - 220V
300V	265 - 347V	-
400V	380 - 450V	-
500V	440 - 575V	-

Certification
• CE(IEC) • UL508 • CCC

Accessories

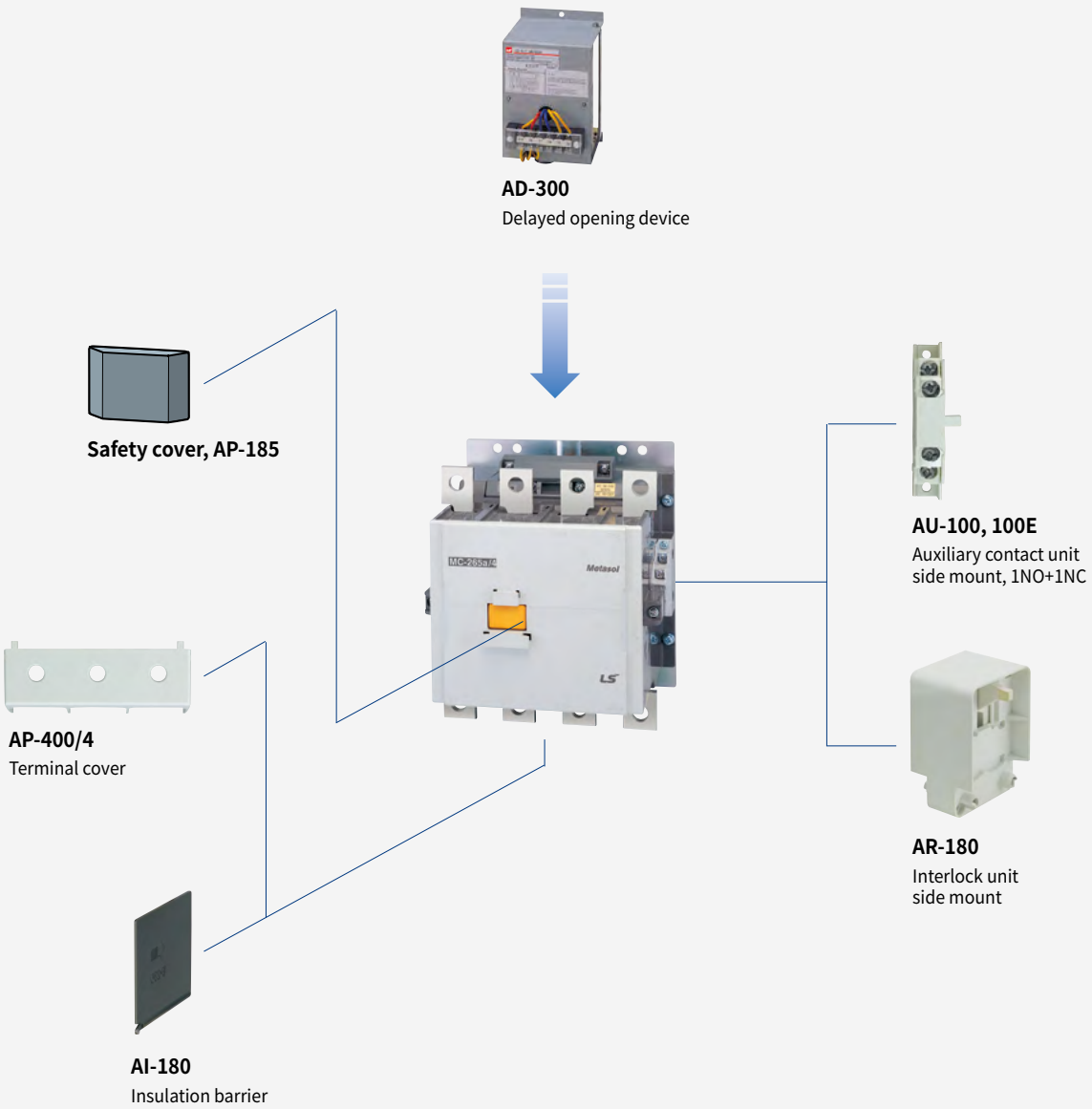

4-pole contactors

800AF

- 4-pole main contact
- AC/DC general use coil
- Wide coil operating voltage
- Screw mount
- 2NO2NC auxiliary contacts built-in as standard
- Side mount accessories
- IP20 rated

MC-800a/4

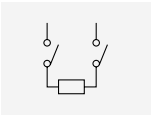

2-pole for DC contact

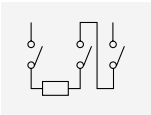

3-pole for DC contact

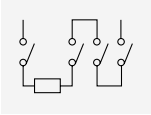

4-pole for DC contact

Rating

Contactor type			MC-500a/4		MC-630a/4		MC-800a/4	
			kW	A	kW	A	kW	A
AC duty	AC1	200/240V	245	700	255	900	310	1050
		380/440V	450	700	470	900	570	1050
		500/550V	560	700	590	900	710	1050
		690V	710	700	740	900	900	1050
	AC3	200/240V	147	500	190	630	220	800
		380/440V	265	500	330	630	440	800
		Ith	-	700	-	900	-	1050
DC1 duty (L/R=1ms)	2-pole	110V	-	200	-	630	-	630
		220V	-	200	-	630	-	630
	3-pole	110V	-	400	-	630	-	800
		220V	-	300	-	630	-	800
	4-pole	110V	-	400	-	630	-	800
		220V	-	300	-	630	-	800
UL rating			hp	A	hp	A	hp	A
		220/240V	200	-	250	-	300	-
		440/480V	400	-	500	-	600	-
		550/600V	400	-	500	-	600	-
		Ith	-	700	-	900	-	1050
Conductor size (Solid, stranded) (Max number of conductors: 2)		AWG	350~800		600~2000		1700~Busbar	
		mm²	185~480		-		-	
Conductor type			75°C Cu stranded wire					

Coil voltage, AC/DC common

Nominal(Ordering) voltage	AC 50/60Hz	DC
100V	100 - 127V	100 - 220V
200V	200 - 240V	200 - 220V
300V	265 - 347V	-
400V	380 - 450V	-
500V	440 - 575V	-

Certification
• CE(IEC) • UL508 • CCC

Accessories

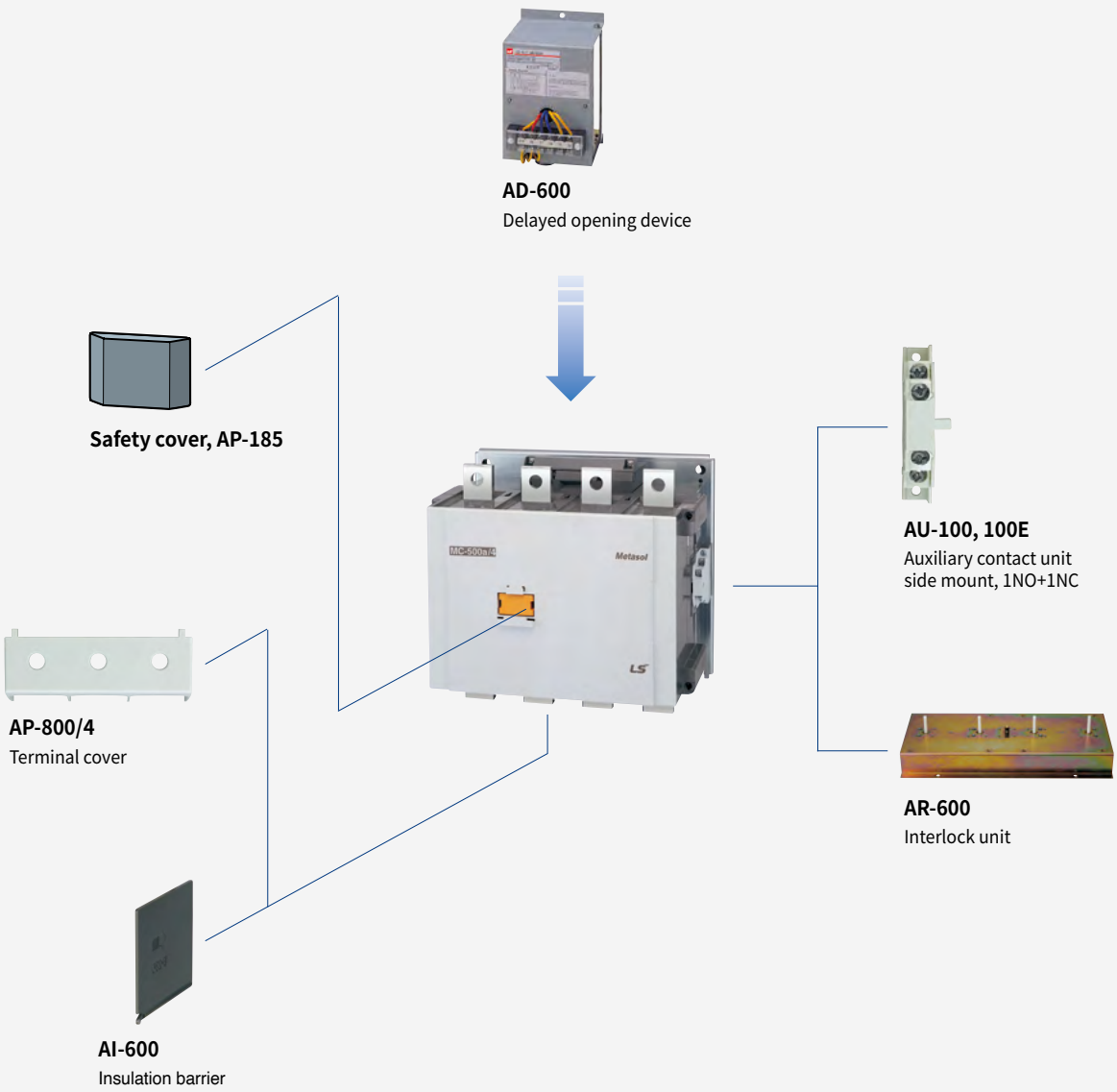

Enclosed motor starters, Mold enclosure

Features

- Enclosed and full voltage type
  MW- □bM: Plastic enclosure without buttons
  MW- □bMB: Plastic enclosure with ON/OFF buttons
- With differential or non-differential type thermal overload
- Relay contactors: 3-pole with AC coil
- Screw mount
- IP40 rated

Internal device

Rating

Type	AC3 Ratings (IEC 60947-4-1)				Auxiliary contact (standard)	Devices combined	
	220~ 240V	380 ~ 440V	500 ~ 550V	690V		Contactor	Overload relay
MW-9bM(B)	2.5kW 11A	4kW 9A	4kW 7A	4kW 6A	1NO1NC	MC-9b	MT-32 (0.1~22A)
MW-12bM(B)	3.5kW 13A	5.5kW 12A	7.5kW 12A	7.5kW 9A		MC-12b	
MW-18bM(B)	4.5kW 18A	7.5kW 18A	7.5kW 13A	7.5kW 9A		MC-18b	
MW-22bM(B)	5.5kW 22A	11kW 22A	15kW 20A	15kW 18A		MC-22b	

Overload relay setting range, Amp.

MT-12		MT-32		MT-63		MT-95	
0.1 - 0.16	5 - 8	0.1 - 0.16	5 - 8	4 - 6	28 - 40	7 - 10	54 - 75
0.16 - 0.25	6 - 9	0.16 - 0.25	6 - 9	5 - 8	34 - 50	9 - 13	63 - 85
0.25 - 0.4	7 - 10	0.25 - 0.4	7 - 10	6 - 9	45 - 65	12 - 18	70 - 95
0.4 - 0.63	9 - 13	0.4 - 0.63	9 - 13	7 - 10		16 - 22	80 - 100
0.63 - 1	12 - 18	0.63 - 1	12 - 18	9 - 13		18 - 25	
1 - 1.6		1 - 1.6	16 - 22	12 - 18		24 - 36	
1.6 - 2.5		1.6 - 2.5	18 - 25	16 - 22		28 - 40	
2.5 - 4		2.5 - 4	22 - 32	18 - 25		34 - 50	
4 - 6		4 - 6	28 - 40	24 - 36		45 - 65	

Coil voltage

AC	50Hz	24, 32, 42, 48, 80, 100, 110, 220, 230, 240, 380, 400, 500, 550V
	60Hz	24, 48, 100, 110, 120, 200, 208, 220, 230, 240, 277, 380, 480, 600V

Certification
• CE(IEC) • UL508

Type numbering system

MW-6a / **B** / **2H**

Rated current	
6a	6A
⋮	
100a	100A

Enclosure type	
-	Without push button(Steel enclosure)
B	With push button (Steel enclosure)
M	Without push button (Mold enclosure)
MB	With push button (Mold enclosure)

Thermal overload relay version	
2H	Non-differential(2-heater)
3H	Non-differential(3-heater)
3K	Differential
3D	Class 20

Features

- Full voltage type
  MW- □a/MW- □b: Steel enclosure without buttons
  MW- □aB/MW- □bB: Steel enclosure ON/OFF buttons
- Contactors: 3-pole with AC coil
- Overload relay with differential or non-differential type
- Screw mount
- IP40 rated

Internal device

Rating

Type	AC3 Ratings (IEC 60947-4-1)					Devices combined	
	220~ 240V	380 ~ 440V	500 ~ 550V	690V	1000V	Contactor	Overload relay
MW-6a(B)	2.2kW 9A	3kW 7A	3kW 6A	3kW 4A	-	MC-6a	MT-12 (0.1~18A)
MW-9a(B)	2.5kW 11A	4kW 9A	4kW 7A	4kW 5A	-	MC-9a	
MW-12a(B)	3.5kW 13A	5.5kW 12A	7.5kW 12A	7.5kW 9A	-	MC-12a	
MW-18a(B)	4.5kW 18A	7.5kW 18A	7.5kW 13A	7.5kW 9A	-	MC-18a	
MW-9b(B)	2.5kW 11A	4kW 9A	4kW 7A	4kW 6A	-	MC-9b	MT-32 (0.1~22A)
MW-12b(B)	3.5kW 13A	5.5kW 12A	7.5kW 12A	7.5kW 9A	-	MC-12b	
MW-18b(B)	4.5kW 18A	7.5kW 18A	7.5kW 13A	7.5kW 9A	-	MC-18b	
MW-22b(B)	5.5kW 22A	11kW 22A	15kW 20A	15kW 18A	-	MC-22b	
MW-32a(B)	7.5kW 32A	15kW 32A	18.5kW 28A	18.5kW 20A	22kW 17A	MC-32a	MT-32 (0.1~40A)
MW-40a(B)	11kW 40A	18.5kW 40A	22kW 32A	22kW 23A	22kW 17A	MC-40a	
MW-50a(B)	15kW 55A	22kW 50A	30kW 43A	30kW 28A	30kW 23A	MC-50a	MT-63 (4~65A)
MW-65a(B)	18.5kW 65A	30kW 65A	33kW 60A	33kW 35A	30kW 23A	MC-65a	
MW-75a(B)	22kW 75A	37kW 75A	37kW 64A	37kW 42A	37kW 28A	MC-75a	MT-95 (7~100A)
MW-85a(B)	25kW 85A	45kW 85A	45kW 75A	45kW 45A	37kW 28A	MC-85a	
MW-100a(B)	30kW 105A	55kW 105A	55kW 85A	55kW 65A	37kW 28A	MC-100a	

Overload relay setting range, Amp.

MT-12		MT-32		MT-63		MT-95	
0.1 - 0.16	5 - 8	0.1 - 0.16	5 - 8	4 - 6	28 - 40	7 - 10	54 - 75
0.16 - 0.25	6 - 9	0.16 - 0.25	6 - 9	5 - 8	34 - 50	9 - 13	63 - 85
0.25 - 0.4	7 - 10	0.25 - 0.4	7 - 10	6 - 9	45 - 65	12 - 18	70 - 95
0.4 - 0.63	9 - 13	0.4 - 0.63	9 - 13	7 - 10		16 - 22	80 - 100
0.63 - 1	12 - 18	0.63 - 1	12 - 18	9 - 13		18 - 25	
1 - 1.6		1 - 1.6	16 - 22	12 - 18		24 36	
1.6 - 2.5		1.6 - 2.5	18 - 25	16 - 22		28 40	
2.5 - 4		2.5 - 4	22 - 32	18 - 25		34 50	
4 - 6		4 - 6	28 - 40	24 - 36		45 65	

Coil voltage

AC	50Hz	24, 32, 42, 48, 80, 100, 110, 220, 230, 240, 380, 400, 500, 550V
	60Hz	24, 48, 100, 110, 120, 200, 208, 220, 230, 240, 277, 380, 480, 600V

Certification
• CE(IEC) • UL508

Features

- Capacitor unit (Pre-loading resistor) is connected to the terminals of the contactor to reduce high inrush current exceeding 20xIn.
- AC control coil on selection
- 3-pole (NO) main contact
- Finger-proof design
- DIN rail or screw mountable
- IEC 60947-4-1 AC 6b

Rating

Type	Rating (kVar, A)			
	220~240V	400~440V	500~550V	600~690V
MC-9b with AC-9	5kVar	9.7kVar	14kVar	16kVar
	13A	14A	16A	15A
MC-12b with AC-9	6.7kVar	12.5kVar	18kVar	18kVar
	18A	18A	21A	17A
MC-18b with AC-9	8.5kVar	16.7kVar	24kVar	26kVar
	22A	24A	28A	25A
MC-22b with AC-9	10kVar	18kVar	26kVar	30kVar
	26A	26A	30A	29A
MC-32a with AC-9	15kVar	25kVar	36kVar	40kVar
	39A	36A	42A	38A
MC-40a with AC-9	20kVar	33.3kVar	48kVar	53kVar
	52A	48A	55A	51A
MC-50a with AC-50	20kVar	40kVar	58kVar	65kVar
	52A	58A	67A	63A
MC-65a with AC-50	25kVar	45.7kVar	66kVar	73kVar
	66A	66A	76A	70A
MC-75a with AC-75	29.7kVar	54kVar	78kVar	85kVar
	78A	78A	90A	82A
MC-85a with AC-75	35kVar	60kVar	92kVar	100kVar
	92A	87A	106A	96A
MC-100a with AC-75	37kVar	62kVar	94kVar	105kVar
	97A	89A	109A	101A

Note: 1. When the switch is closed, the condenser must be discharged before recharging. (Maximum residual voltage at terminals ≤ 50V)
2. To prevent short current, gG type fuse must be sized 1.5~2 times higher than rated current.

Type	Rating (kVar)	
	600~690V	1000V
MC-9b	3.5kVar	-
MC-12b	4kVar	-
MC-18b	4.5kVar	-
MC-22b	8kVar	-
MC-32a	14kVar	-
MC-40a	18kVar	-
MC-50a	25kVar	-
MC-65a	35kVar	-
MC-75a	40kVar	-
MC-85a	45kVar	-
MC-100a	48kVar	-
MC-130a	60kVar	60kVar
MC-150a	78kVar	78kVar
MC-185a	140kVar	140kVar
MC-225a	150kVar	150kVar
MC-265a	155kVar	155kVar
MC-330a	160kVar	160kVar
MC-400a	250kVar	250kVar
MC-500a	300kVar	300kVar
MC-630a	350kVar	350kVar
MC-800a	450kVar	450kVar

Coil voltage

AC	50Hz	24, 32, 42, 48, 80, 100, 110, 220, 230, 240, 380, 400, 500, 550V
	60Hz	24, 48, 100, 110, 120, 200, 208, 220, 230, 240, 277, 380, 480, 600V

- These capacitive contactors are suitable for switching single-step or multiple-step condenser bank.
- Meets IEC-60947-4941, UL and CSA standards.
- Features of capacitor unit (Pre-loading resistor):
  - Damping resister that can limit the inrush current upto 60xIn is connected to the mechanism that closes before the main contact of the contactor
  - No heat loss by the serial resistor
  - Eliminate switching surge
  - Improve performance of the capacitor system

Example

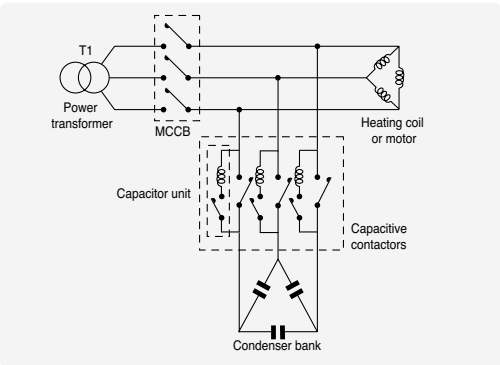

2-pole AC contactors, Definite purpose

Features

- Two normally open main contacts
- Screw clamp or fast-on connections
- Small and light design suitable for use in air conditioners, heaters, refrigerators, etc.
- Screw mount
- No auxiliary contact
- AC control voltage

Rating

Type	AC3 ratings			Ith	Contact	
	220~240V	380~440V	500~550V		NO	NC
GMC-10P2	10A	8A	6A	20A	2	-
GMC-20P2	20A	17A	14A	30A	2	-
GMC-25P2	25A	21A	17A	35A	2	-
GMC-30P2	30A	23A	21A	40A	2	-
GMC-35P2	35A	26A	23A	45A	2	-
GMC-40P2	40A	32A	26A	50A	2	-

Insulation voltage rating: 690V AC, 250V DC

Control coil characteristics

Coil voltage	Coil consumption (VA)		Thermal dissipation (W)	Operational voltage (V)		Coil current (mA)	Operational time (ms)	
	Inrush	Holding		Pick-up	Drop-out		Closing	Opening
24V 50/60Hz	35	6.0	2	83% or less of coil voltage	More than 20% of coil voltage	263	40	30
48V 50/60Hz	35	6.0	2			131	40	30
100V 50/60Hz	35	6.0	2			63	40	30
110V 50/60Hz	35	6.0	2			57	40	30
120V 50/60Hz	35	6.0	2			53	40	30
200V 50/60Hz	35	6.0	2			32	40	30
220V 50/60Hz	35	6.0	2			29	40	30
230V 50/60Hz	35	6.0	2			27	40	30
240V 50/60Hz	35	6.0	2			26	40	30

Note: 1. The condition of the above data: 60Hz. 20°C from cold state
2. Coil consumption (VA) is average value.

Main terminal

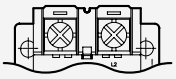

Screw clamp

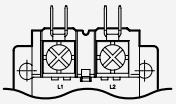

Fast-on (Quick connect)

Coil terminal

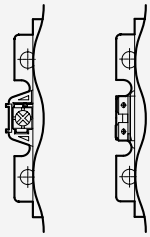

Screw clamp | Fast-on (Quick connect)

Type numbering system

GMC / 10P 2 / TS BQ 100V

Contactors

Capacity (A)	
10P	10
20P	20
25P	25
30P	30
35P	35
40P	40

Pole	
2	2-pole

Main terminal connect	
TS	Screw clamp
TQ	Quick connect

Power supply connect	
BS	Screw clamp
BQ	Quick connect

Operating voltage (AC)	
20V	24V
48V	24~240
110V	100~120V
220V	208~240V

3-pole AC contactors, Definite purpose

Features

- Three main contacts
- Screw clamp connections
- Small and light design suitable for use in air conditioners, heaters, refrigerators, etc.
- Screw mount
- No auxiliary contact
- AC control voltage

Rating

Type	AC3 ratings			AC4 ratings			Ith	Contact	
	220~ 240V	380 ~ 440V	500 ~ 550V	220~ 240V	380~ 440V	500~ 550V		NO	NC
GMC-20D2 GMC-20D3	20A	17A	14A	18A	13A	10A	30A	2	-
								3	-
								2	1
GMC-25D2 GMC-25D3	25A	21A	17A	20A	14A	12A	35A	2	-
								3	-
								2	1

Note: Above contact ratings are for NO contact
Rating for NC contact: 6A@120V, 3A@240V, 1.5A@480V at AC15 duty
Rating above 24V 1A
Use NC contact for insulation voltage: 690V AC, 250V DC

Control coil characteristics

Coil voltage	Coil consumption (VA)		Thermal dissipation (W)	Operational voltage(V)		Coil current (mA)	Operational time (ms)	
	Inrush	Holding		Pick-up	Drop-out		Closing	Opening
24V 60Hz	72	9.0	3	83% or less of coil voltage	More than 20% of coil voltage	215	30	20
48V 60Hz	72	9.0	3			125	30	20
110V 60Hz	72	9.0	3			60	30	20
220V 60Hz	72	9.0	3			41	30	20

Note: 1. The condition of the above data: 60Hz. 20 °C from cold state
2. Coil consumption (VA) is average value.

Type numbering system

GMC / **20** **D2** **2NO1NC** **AC 220V**

Contactors

Rated current	
20	20
25	25

Pole	
D2	2NO, 2NO1NC
D3	3NO

Auxiliary contact	
-	2-pole: 2NO
	3-pole: 3NO
2NO 1NC	2NO1NC

Operating voltage (AC)
20V
48V
110V
220V

Single-pole AC contactors, Definite purpose

Features

- Single-pole NO main contact
- Small and light design suitable for use in electric shock protector for AC arc welder
- DIN rail or screw mount
- No auxiliary contact (Optional unit can be added up to 2NO2NC)
- AC control voltage

Rating

Type	Rated current, In 110/220V	Ith	Performance	
			Making current	Breaking current
MC-65aSP	220A	500A	1.5×In	

Control coil characteristics

Coil consumption (VA)		Operational voltage		Operational time
Inrush	Holding	Pick-up	Drop-out	Closing
150VA	17VA	85% under	20% over	30ms under

Note: Coil voltage is available between AC24V and AC550V

2-pole DC contactors

Features

- Two normally open main contacts for DC circuit
- Positive and negative poles indicated on the front plate
- External magnet installed for arc extinguishing
- DIN rail or screw mount
- 2NO2NC auxiliary contacts built-in as standard
- AC/DC control voltage
- Durability : 500K times(Elec.) / 10M times(Mech.)

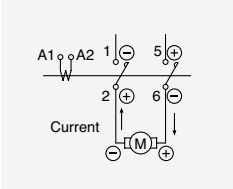

Selection

Contactor Type	DC-3, 5 ratings			DC-1 rating	Continuous current, Ith	Auxiliary contacts
	125V	250V	500V	1000V		
MD-30a	40A	30A	20A	10A	60A	2a(NO)+2b(NC)
MD-60a	80A	60A	40A	25A	100A	2a(NO)+2b(NC)
MD-100a	120A	100A	60A	35A	135A	2a(NO)+2b(NC)

Ratings of auxiliary contacts

UA-1	AC15 duty						DC13 duty				
	120V	240V	380V	480V	500V	600V	125V	250V	400V	500V	600V
Rated currents	6A	3A	1.9A	1.5A	1.4A	1.2A	1.1A	0.55A	0.31A	0.27	0.2A
Continuous current, Ith	16A										

Coil voltage

AC	50/60Hz	24, 48, 100, 110, 120, 200, 220, 230, 240, 380, 400, 415, 440, 500, 550V
DC		12, 20, 24, 48, 60, 80, 100, 110, 125, 200, 220, 250V

Auxiliary contact units

- 2- and 4-pole
- Side and front mount
- General use for Metasol contactors from MC-6a to MC-150a, and from MC-6a/4 to 85a/4
- Auxiliary contact meet the requirements for mirror contacts in IEC 60947-4-1. Annex F (A mirror contact is an auxiliary NC contact that cannot be closed simultaneously with a NO main contact)

MC-6a~MC-150a
MC-6a/4~85a/4

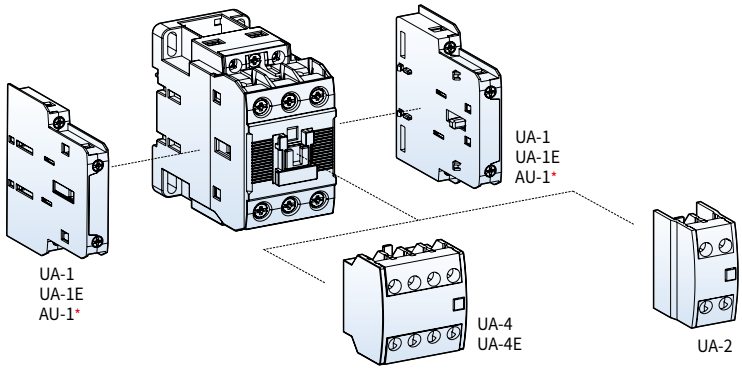

* AU-1 only applies to MC-22a/4~85a/4.

Selection

Type	Appearance	Pole	Composition		Contact arrangement	Mount	Weight
			No	Nc			
UA-1 UA-1E AU-1	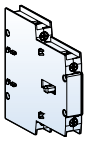	2	1	1	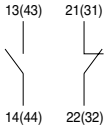	Side	53g
UA-2	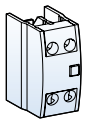	2	2 1 -	- 1 2	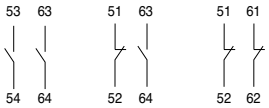	Front	28g
UA-4 UA-4E	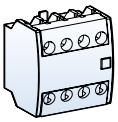	4	4 3 2 1 -	- 1 2 3 4	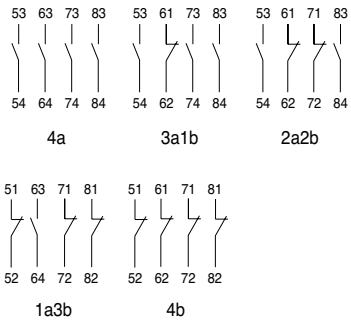	Front	50g

* UA-1 auxiliary contact cannot be attached to the right side of 22AF product

Maximum combination of contact units

MC-6a~18a, 9b~22b (Max. 3a3b)	MC-32a~150a (Max. 4a4b)
UA-4(2a2b)+UA-1×1EA (1EA on one side)	UA-4(2a2b)+UA-1×2EA (1EA on both sides)
UA-2(2a, 1a, 1b, 2b)+UA-1×1EA (1EA on one side)	UA-2(2a, 1a, 1b, 2b)+UA-1×2EA (1EA on both sides)
UA-1×2EA (1EA on both sides)	UA-1×4EA (2EA on both sides) *For AC Coil

* Max. 2a2b can be attached for MC-6a~18a & 9b~22b DC type.
- UA-4(2a2b) 1EA
- UA-2(2a, 1a, 1b, 2b) 1EA
- UA-2(1a1b) 1EA + UA-1 1EA
- UA-1 1EA

Auxiliary contact units

- 2-pole
- Side mount
- Auxiliary contact meet the requirements for mirror contacts in IEC 60947-4-1. Annex F (A mirror contact is an auxiliary NC contact that cannot be closed simultaneously with a NO main contact)

MC-185a~MC-2650a
MC-100a/4~800a/4
MCi-900~MCi-2650

Selection

Type	Appearance	Pole	Composition		Contact arrangement	Mount	Weight
			a(NO)	b(NC)			
AU-100 AU-100E	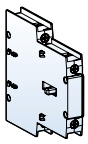	2	1	1	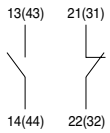	Side	53g

Maximum combination of contact units

MC-185a~2650a (Max. 4a4b)
AU-100 × 4EA (2EA on both sides)
AU-100E × 4EA (2EA on both sides)

Installation

UA-1

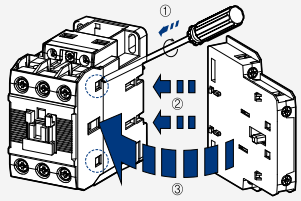

Remove circled components in the figure above before side mounting installation. Then fit each part as shown.
To separate push forward and pull.

UA-2, 4

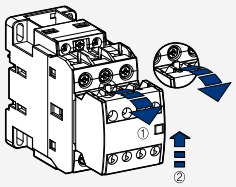

Attach upper part of the front area and push down for front mounting installation. To separate, pull the lever of the unit and push the unit upward.

Rating

Type			UA-1	AU-1	UA-2, 4	AU-100
Rated operating voltage		(Ue)	600V	600V	600V	600V
Rated insulation voltage		(Ui)	1000V	690V	690V	600V
Rated impulse withstand voltage		(Uimp)	8kV	8kV	6kV	6kV
Rated frequency			50/60Hz	50/60Hz	50/60Hz	50/60Hz
Contact sensibility	Voltage		DC 24V	DC 24V	DC 24V	DC 24V
	Current		DC 10mA	DC 10mA	DC 10mA	DC 10mA
Rated thermal current (Ith, AC12 duty)			16A	16A	16A	16A
Rated operating current	AC15 duty	120V	6A	6A	6A	6A
		240V	3A	3A	3A	3A
		380V	1.9A	1.9A	1.9A	1.9A
		480V	1.5A	1.5A	1.5A	1.5A
		500V	1.4A	1.4A	1.4A	1.4A
		600V	1.2A	1.2A	1.2A	1.2A
		600V	0.2A	0.2A	0.1A	0.2A
Rated	1s		100A	100A	-	100A
Short-time withstand current	0.5s		125A	125A	-	120A
	0.1s		145A	145A	-	140A
Electrical lifetime (Mil. operations)	AC15 duty	220V	0.25	0.25	0.25	0.25
		440V	0.25	0.25	0.25	0.25
Maximum operating cycles per hour			1800	1800	1800	1800
Conductor size (Solid, stranded) (Max number of conductors : 2)		AWG	18~10	18~10	18~10	18~10
		mm^2	1~2.5	1~2.5	1~2.5	1~2.5

Pneumatic timer

Air pressure timer

Combination with MC

The timer attached to the head of the magnetic contactor. Using the principle of air pressure, it is delayed by the set time after the magnetic contactor is inserted and released. Then the auxiliary contact of the pneumatic timer is reversed.

UN - 1 N

Time delay range	
1	0.1 ~ 3s
2	0.1 ~ 30s
3	10 ~ 180s

Timer type	
N	ON delay
F	OFF delay

Note: Applicable MC: MC-6a ~ 100a, MC-9b ~ 22b, AC operation voltage

Type		MC-6a~100a / MC-9b~22b					
		UN-1N	UN-2N	UN-3N	UN-1F	UN-2F	UN-3F
Standards		IEC60947-5-1, GB14048.5					
Certification		CCC, CE					
Degree of protection		IP20					
Temperature range	Storage	-25°C ~ +60°C					
	Operation	-5°C ~ +40°C					
Altitude		2,000m less					
Poles		1NO + 1NC					
Rated operating voltage		600V					
Rated insulation voltage		690V					
Frequency		50/60Hz					
Rated operation current(Ie)		A600(AC-15), Q600(DC-13)					
Ith(Thermal current)		10A					
Minimum switching capacity		DC 24V 10mA					
Irms rated making capacity		10 x Ie AC-15 acc. to IEC 60947-5-1					
Non overlap time		1.5ms					
Setting time		0.1~3s	0.1~30s	10~180s	0.1~3s	0.1~30s	10~180s
Operating time tolerance		±50% less					
Mechanical durability		2.5 mil. operations					

On Delay timer block(UN-N)

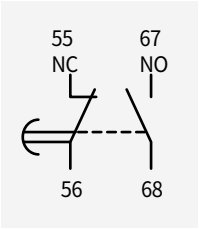

0.1~3s
0.1~30s
10~180s

Off Delay timer block(UN-F)

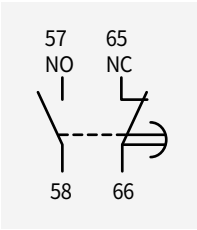

0.1~3s
0.1~30s
10~180s

Mechanical latch unit ML, AL

Mechanical latch unit　　Contactor　　Combined

ML-65

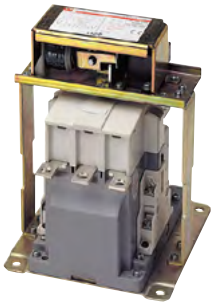

Rating

Applying contactors	Type	Coil voltage of latch unit
MC-6a MC-9a MC-12a MC-18a MC-9b MC-12b MC-18b MC-22b MC-32a MC-40a	ML-40	
MC-50a MC-65a	ML-65	
MC-75a MC-85a MC-100a MC-130a MC-150a	ML-150	
MC-185a MC-225a	AL-225	
MC-265a MC-330a MC-400a	AL-400	

Ordering voltage	Operation voltage
AC 24V/ DC 24V	AC 24V 50/60Hz, DC 24V
AC 48V/ DC 48V	AC 48V 50/60Hz, DC 48V
AC 100V/DC 100V	AC 100~127V 50/60Hz, DC 100V~125V
AC 200V/DC 200V	AC 200~240V 50/60Hz, DC 200V~220V
AC 400V	AC 380V~440V 50/60Hz

* Coils for 24, 48, 100, 200V are AC / DC

Ordering voltage	Operation voltage
AC 100V	AC 100~127V 50/60Hz, DC 100~110V
AC 200V	AC 200~240V 50/60Hz, DC 200~220V

* For the product providing DC control power,
the maximum switching frequency should be less than 150 times/hour.

Note: Latch units up to MC-150 are supplied seperately.
ML-40 can also be attached to MR

To install

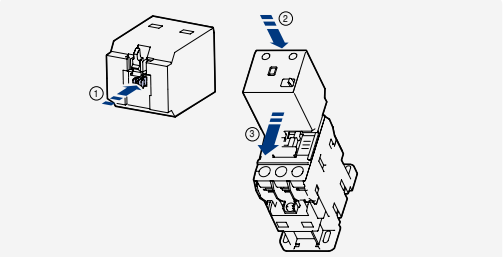

1. Push the black bar
2. Position the Latch on the top of the contactor
3. Pull in the direction of the arrow until snapping in place

To separate

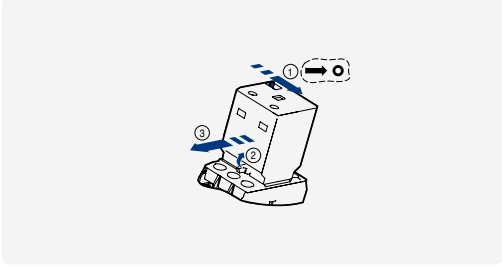

1. Pull the black lever in the direction of the arrow
2. Pull up the yellow lever
3. Push the latch in the direction of the arrow

Delayed opening devices, AD

Delayed opening device prevents the inadvertent opening of a contactor in the event of a wide voltage drop or brief supply voltage interruptions of control power for 1 to 7 seconds.

Applying contactors	Type	Rated voltage	MC Rated voltage	Durability		Performance
				Mechanical	Electrical	
MC-6a~18a	AD-9	AC 110V	DC 110V	5 mil operations	1 mil operations	• Making/Breaking capacity at AC3 - Making current : min. 10xIn - Breaking current : min. 8xIn • Max. operating rate : 600 operations/hour • Delay time : 1~7sec. • Capacitor durability 1) Operation :> 0.1 mil. operations 2) Cumulative charge life at AC 200/220V - 45°C or less: 80,000 hours - 50°C or less: 60,000 hours
MC-9b~22b		AC 220V	DC 220V			
MC-32a~40a	AD-32	AC 110V	DC 110V			
		AC 220V	DC 220V			
MC-50a~100a	AD-50	AC 110V	DC 110V			
		AC 220V	DC 220V			
MC-130a~225a	AD-100	AC 100~240V	AC/DC 100~240V		0.5 mil operations	
MC-265a~400a	AD-300	AC 100~240V	AC/DC 100~240V			
MC-500a~800a	AD-600	AC 100~127V	AC/DC 100~127V			
		AC 200~240V	AC/DC 200~240V			

* AD shall be used for DC type contactor

Electronic timer unit, UT

Applying contactors		Type	Rated voltage	Performance
MC-6a~150a MC-9b~22b MR-4~8	On delay	UT-1N	AC/DC 24~48V	• Mounting: Head on • Contact: 1c • Time delay: 1 Sec~30 Sec On delay, Off delay • Frequency: AC 50/60Hz • Operation: Min. voltage 85%, Max. voltage 110% • Accuracy of setting time: ±20%
		UT-2N	AC 110~220V	
	Off delay	UT-1F	AC/DC 24~48V	
		UT-2F	AC 110~220V	

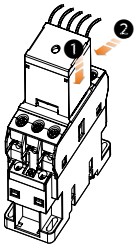

❶ Insert down
❷ Push to assemble

Terminal cover units for contactors, AP

Applying contactors	Type				Notes
	Standard		Transparent		
MC-6a,9a,12a,18a (18AF)	AP-18	Included	AP/T-6	Option	2 pcs required per contactor
MC-9b,12b,18b,22b (22AF)	AP-22		AP/T-9		
MC-32a,40a (40AF)	AP-40		AP/T-32		
MC-50,65a (65AF)	AP-65		AP/T-50		
MC-75a,85a,100a (100AF)	AP-100		AP/T-75		
MC-130a,150a (150AF)	AP-150		AP/T-130		
MC-185a,225a (225AF)	AP-220	Option	AP/T-185		
MC-265a,330a,400a (400AF)	AP-400		AP/T-265		
MC-500a,630a,800 (800AF)	AP-800		AP/T-500		

Insulation barrier units, AI

Applying contactors	Type	Remarks
MC-130a, 150a	AI-180	4 pcs required per contactor
MC-185a, 225a		
MC-265a, 330a, 400a		
MC-500a, 630a, 800a, 1260a	AI-800	
MC-1400a, 1700a, 2100a	AI-2100	
MC-2650a, MCi-1700, 2100, 2650	AI-2650	
MCi-900, 1050, 1260	AI-1260	

* The insulation barrier for MC-150a is available for screw type only.

Interlocks

Component parts for customer assembly

Interlock unit, UR-02 and AR-9 & Wire kit UW

UR-02 is a mechanical interlock unit and provides 2NC contacts for use in electrical interlocking

UW is used for reversing circuit between two contactors.

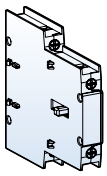

Interlock unit

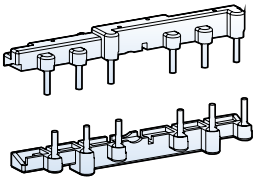

Wire kit

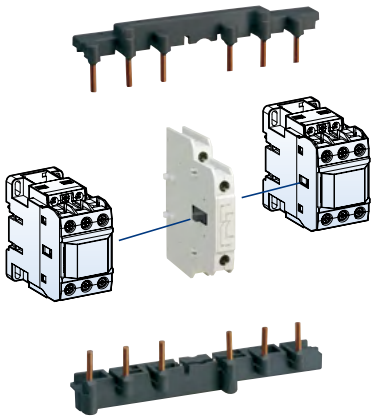

Contactor	Pole	Wire kit		Interlock unit		Auxiliary Contact
		Type	Weight	Type	Weight	
MC-6a~18a	3P	UW-18	0.05kg	UR-02	0.06kg	2NC
	4P	-	-			
MC-9b~22b	3P	UW-22	0.04kg			-
MC-32a~40a		UW-32	0.05kg			-
MC-50a, 65a		UW-63	0.12kg			-
MC-75a~100a		UW-95	0.33kg			-
MC-130a~150a		UW-150	0.6kg			-
MC-22a~85a	4P	-	-	AR-9	0.05kg	-

Rating of the contacts in the interlocks

Rated operating voltage			600V
Rated insulation voltage			1000V
Rated frequency			50/60Hz
Rated thermal current			16A
Rated operating current	AC15 duty (A600)	120V	6A
		240V	3A
		380V	1.9A
		480V	1.5A
		500V	1.4A
		600V	1.2A
	DC13 duty (Q300)	125V	0.55A
		250V	0.27A

MC-6aR ~ MC-150aR typical circuit diagram for reversing contactor

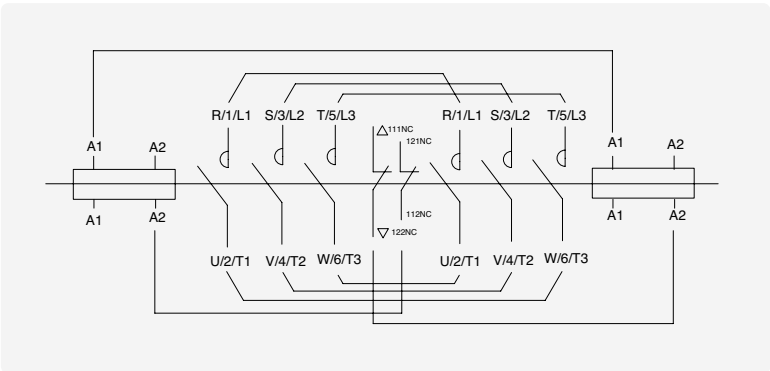

AR-180

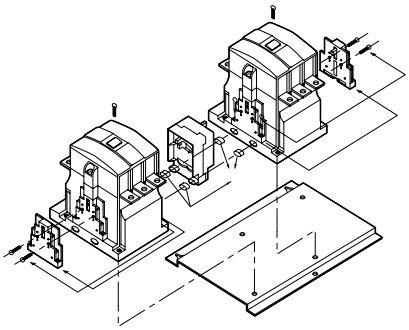

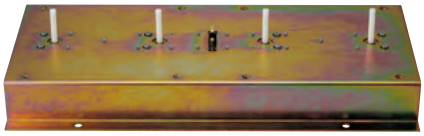

AR-600 & AR-600/V

Interlock unit, AR-180 and AR-600

AR-180 and AR-600 are mechanical interlock units (contacts for electrical interlocking are not included). Please use the auxiliary contacts on the sides of the contactors for electrical interlocking.

Contactor	Pole	Interlock unit	
		Type	Weight
MC-100a	4P	AR-180	0.09kg
MC-130a			
MC-150a			
MC-185a	3,4P		
MC-225a			
MC-265a			
MC-330a			
MC-400a			
MC-500a	3,4P	AR-600 AR-600/V	15.2kg
MC-630a			
MC-800a			

* The sizes of the AR-600 3-pole and AR-600 4-pole product are different.
* The AR-600 / Vis a vertical interlock unit.

MC-180aR ~ MC-800aR typical circuit diagram for reversing contactor

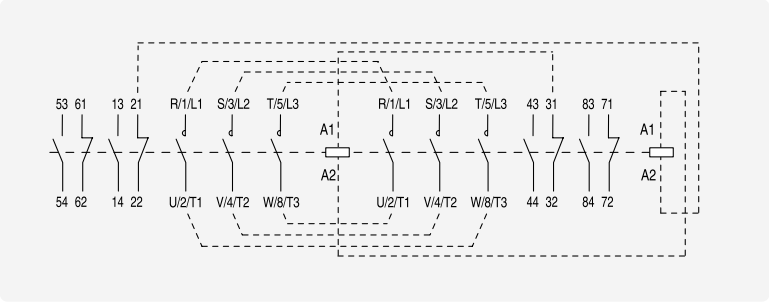

Installation of interlock and wire kits

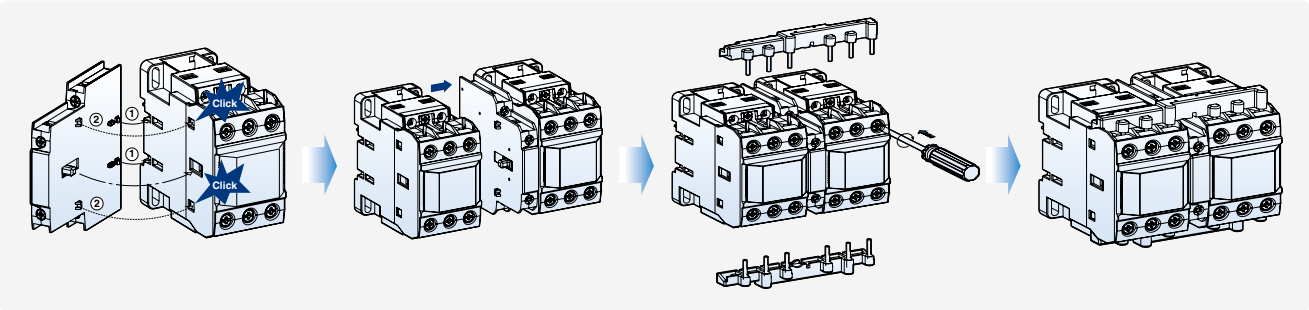

Install the interlock unit on the side of the contactor first, fit each part as indicated in the fig.

Install install the other contactor on the other side of the interlock unit as shown.

After installing the interlock unit, the wiring kit can be assembled. Wiring kit contains two molded wires - one for line side and the other for load side.

- When assembling reversing contactor, check the R, S, T/U, V, W mark on the contactor and wire kit.

Surge unit

- This unit absorbs the surge from the coil of the contactor.
- It can be installed to the contactor.
  - Rated operating voltage (Ue): AC 24 ~ 440V / DC 24 ~ 125V
  - Rated insulation voltage (Ui): 1000V
  - Rated impulse withstand voltage (Uimp): 8kV
  - IP20 rated
  - Combination with 3P 6a/3~150a/3, 4P 32a/4~85a/4

US Type

AS Type

US Type

Surge unit		Rated voltage		Internal elements spec.			Contactor
Type	Composition			V	R	C	
US-1	Varistor+RC	AC	24~48V	120V	100Ω	0.1μF	3-Pole MC 6a~150a 9b~22b 4-Pole MC 6a/4~18a/4
US-2	Varistor+RC		100~125V	270V	100Ω	0.1μF	
US-3	Varistor+RC		200~240V	470V	100Ω	0.1μF	
US-4	Varistor+RC	DC	24~48V	120V	100Ω	0.47μF	
US-5	Varistor+RC		100~125V	270V	100Ω	0.47μF	
US-6	Varistor+RC		200~220V	470V	100Ω	0.47μF	
US-11	Varistor	AC/DC Common	24~48V	120V	-	-	
US-12	Varistor		100~125V	270V	-	-	
US-13	Varistor		200~240V	470V	-	-	
US-14	Varistor		380~440V	1000V	-	-	
US-22	RC	AC	100~125V	-	56Ω	1μF	

Installation (US Type)

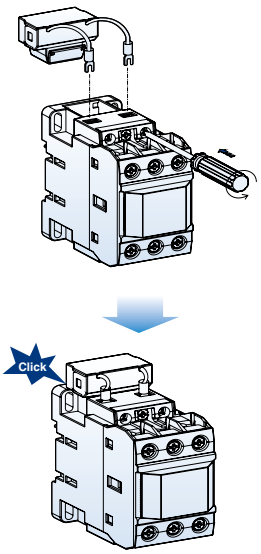

Connect the lead wires to the coil terminals of the contactor. Then attach the body on the contactor as shown above.

AS Type

Surge unit		Rated voltage		Internal elements spec.			Contactor
Type	Composition			V	R	C	
AS-1	Varistor+RC	AC	24~48V	120V	100Ω	0.1μF	3-Pole MC 185a~800a 4-Pole MC 22a/4~800a/4
AS-2	Varistor+RC		100~125V	270V	100Ω	0.1μF	
AS-3	Varistor+RC		200~240V	470V	100Ω	0.1μF	
AS-4	Varistor+RC	DC	24~48V	120V	100Ω	0.47μF	
AS-5	Varistor+RC		100~125V	270V	100Ω	0.47μF	
AS-6	Varistor+RC		200~220V	470V	100Ω	0.47μF	
AS-11	Varistor	AC/DC Common	24~48V	120V	-	-	
AS-12	Varistor		100~125V	270V	-	-	
AS-13	Varistor		200~240V	470V	-	-	
AS-14	Varistor	AC	380~440V	1000V	-	-	

Specitication of surge unit

Without surge unit	① With varistor unit	② With CR+Varistor unit
Surge voltage arises when the coil is off and may provoke misoperation and damage the circuit. 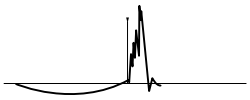	Varistor helps cut down the peak voltage. 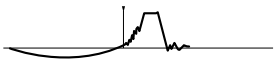	Varistor helps cut down peak voltage and high frequency wave. 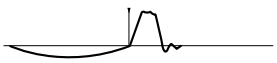

Capacitor unit

Capacitor unit is connected to the terminals of the contactor to reduce high inrush current (adheres to IEC 60947-5-1).

Type (Auxiliary Contact 1b)				AC-9 (1b)	AC-50 (1b)	AC-75 (1b)
Rating thermal current (Ith)				16A	16A	16A
Current	AC-15	Rated Operating Current (A)	120V	6	6	6
			240V	3	3	3
			380V	1.9	1.9	1.9
			480V	1.5	1.5	1.5
			500V	1.4	1.4	1.4
			600V	1.2	1.2	1.2
	DC-13	Rated Operating Current (A)	125V	0.55	0.55	0.55
			250V	0.27	0.27	0.27
			400V	0.15	0.15	0.15
			500V	0.13	0.13	0.13
			600V	0.1	0.1	0.1

Features of capacitor unit (Pre-loading resistor)

- Damping resister can limit the inrush current up to 60xIn connected to the mechanism that closed before the main contact of the contactor
- No heat loss by serial resistor
- Eliminate switching surge
- Improve capacitor system performance

Operation sequence

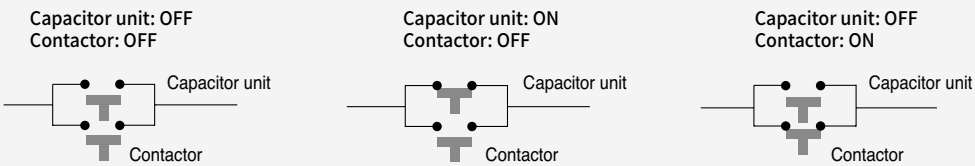

Fig.1 Fig.2 Fig.3

Note: Closing sequence: Fig.1 => Fig.2 => Fig.3
Opening sequence: Fig.3 => Fig.1

Replacement coils

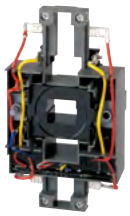

This unit replaces the existing coil to change voltage or repair.

Contactor	Coil voltage							
	AC coil						DC coil	
	AC 60Hz (V)		AC 50Hz (V)		AC 50/60Hz (V)		DC (V)	
MC-6a MC-9a MC-12a MC-18a MR-4, 6, 8	24 48 100 110 120 200 208 220	230 240 277 380 440 480 600	24 36 42 48 80 100 110 220	230 240 380 400 415 440 500 550	24 48 100 110 120 200 220 230	240 380 415 440 500 550	-	
MC-9b MC-12b MC-18b MC-22b	24 48 100 110 120 200 208 220	230 240 277 380 440 480 600	24 36 42 48 80 100 110 220	230 240 380 400 415 440 500 550	24 48 100 110 120 200 220 230	240 380 415 440 500 550	-	
MC-32a MC-40a	24 48 100 110 120 200 208 220	230 240 277 380 440 480 600	24 36 42 48 80 100 110 220	230 240 380 400 415 440 500 550	24 48 100 110 120 200 220 230	240 380 415 440 500 550	12 20 24 48 60 80 100	110 125 200 220 250
MC-50a MC-65a	24 48 100 110 120 200 208 220	230 240 277 380 440 480 600	24 36 42 48 80 100 110 220	230 240 380 400 415 440 500 550	24 48 100 110 120 200 220 230	240 380 415 440 500 550	12 20 24 48 60 80 100	110 125 200 220 250
MC-75a MC-85a MC-100a	24 48 100 110 120 200 208 220	230 240 277 380 440 480 600	24 36 42 48 80 100 110 220	230 240 380 400 415 440 500 550	24 48 100 110 120 200 220 230	240 380 415 440 500 550	12 20 24 48 60 80 100	110 125 200 220 250
MC-130a MC-150a	-		-		24 48 24~48 100~240 110~120	220~240 300 380~440 500	24 48 24~48 70~110 100~220	110 220

Replacement process

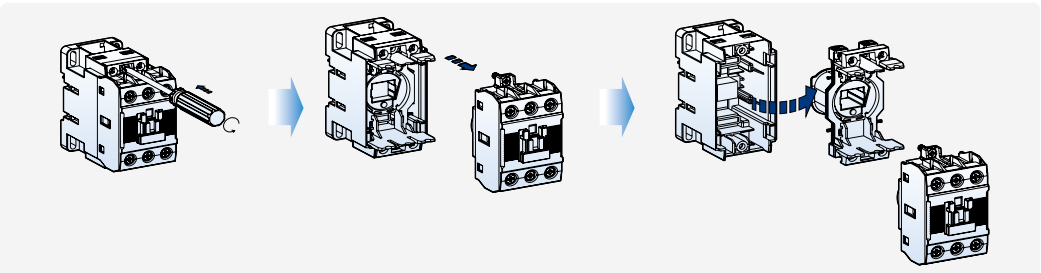

Contactor	Coil voltage	
	AC/DC common coil (V)	AC coil (V)
MC-185a MC-225a	24 48 100~240/100~220	300 400 500
MC-265a MC-300a MC-400a	DC 24 100~240/100~220	300 400 500
MC-500a MC-630a MC-800a MCi-900 MCi-1050	100/100 200/200	300 400 500
MC-1260 MCi-1260	100~240/100~220	-
MC-1400a MC-1700a MC-2100a MC-2650a MCi-1700 MCi-2100 MCi-2650	100~240/100~220	-

Safety cover (optional)

The safety cover prevents the arc from exiting the contactor. The cover provides protection from unintended manual operation and prevents dust from entering the contactor.

Type	Contactor
AP-9	MC-6a~150a
AP-185	MC-185a~800a

Features

Type MT, bimetal-style, overload relays are designed to protect AC circuits and motors against overloads, phase failure, long starting times and prolonged stalling of the motor.

Four versions are available according to the protection function and trip class as below.
1. Non-differential: 3-pole 2bimetal (Heater) and trip class 10A
2. Non-differential: 3-pole 3bimetal(Heater) and trip class 10A
3. Differential: 3-pole 3bimetal (Heater) and trip class 10A
4. Differential: 3-pole 3bimetal (Heater) and trip class 20

Front configuration

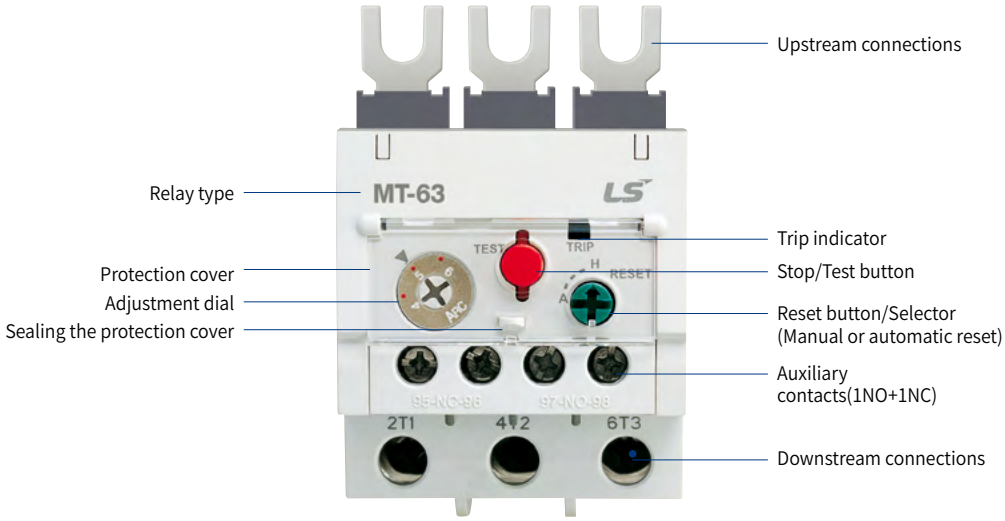

MT-12	MT-32	MT-63	MT-95

Environment and auxiliary circuit

Environment			MT-12~800
Standards			IEC/EN 60947-1, IEC/EN 60947-4-1
Certifications			CE, CSA, UL, CCC
Rated operating voltage			Max. 690V
Rated insulation voltage			690V
Rated frequency			50/60Hz
Degree of protection (Conforming to IEC 60 529)			IP 20
Ambient air temperature		Storage	-30 ~ +65°C
		Operation	-25 ~ +60°C (MT refer to Graph)
Mounting position			Vertical plane
Shock resistance (Conforming to IEC 68-2-7)			15gn - 11ms
Vibration resistance (Conforming to IEC68-2-6)			6G
Insulation strength (Conforming to IEC 255-5)			6kV
Rated impulse withstand voltage (Conforming to IEC 801-5)			6kV
Auxiliary contacts characteristics			
Composition			1NO +1NC
Rated thermal current			5A
Rated operation current			C600, R300
	AC15 duty (C600)	120V	1.5A
		240V	0.75A
		380V	0.47A
		480V	0.375A
		500V	0.35A
		600V	0.3A
	DC13 duty (R300)	120V	0.22A
		240V	0.1A
Connecting conductor Connection to screw clamp terminals		Size	18AWG /1mm^2
		Type	65/75°C Cu-wire

MT-150	MT-225	MT-400	MT-800
	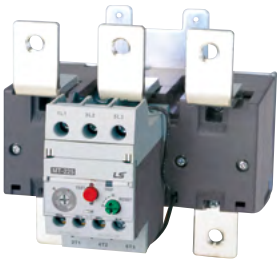	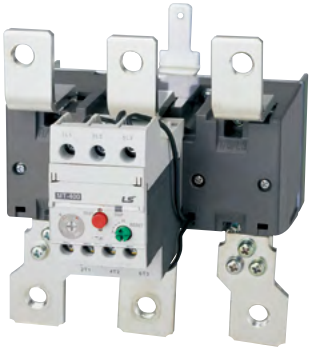	

Overload relay specifications

MT type
Thermal overload relays

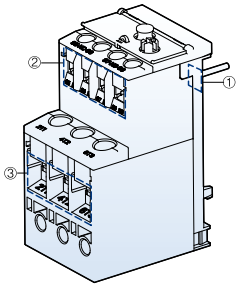

① Main terminals/upstream
② Auxiliary terminals
③ Main terminals/downstream

Frame size			18AF		
Trip class			10A	20	
Type	Non-differential (3P-2 heater)		MT-12/2H□S	-	
	Non-differential (3P-3 heater)		MT-12/3H□S	-	
	Differential type		MT-12/3K□S	MT-12/3D□S	
Terminals	Main-upstream		Screw clamp		
	Main-downstream		Screw clamp		
	Auxiliary		Screw clamp		
Number of poles			3		
Rated operating voltage (Ue)			690V		
Rated insulation voltage (Ui)			Up to 690V		
Rated impulse voltage (Uimp)			6kV		
Degree of protection (IEC 60 529)			IP 20		
Temperature compensation (°C)			-5~+40°C		
Functions	Trip indicating		■		
	Stop		-		
	Test		■		
	Manual/Automatic reset		■		
Setting range(A)			0.1~18A	1~18A	
Nominal current rating	Wire size				
	mm²	AWG			
0.14	1	18	0.1~0.16		
0.21			0.16~0.25		
0.33			0.25~0.4		
0.52			0.4~0.63		
0.82			0.63~1		
1.3			1~1.6	1~1.6	
2.1			1.6~2.5	1.6~2.5	
3.3			2.5~4	2.5~4	
5			4~6	4~6	
6.5			5~8	5~8	
7.5	1~1.5	18~16	6~9	6~9	
8.5			7~10	7~10	
11	1.5~2.5	16~14	9~13	9~13	
15	2.5	14~12	12~18	12~18	
19	2.5~4	12~10			
21.5					
27	4~6	10			
30	4~10	10~8			
34	6~10	10~8			
42	10	8			
54					
65	16~25	6~4			
74					
83	25~35	4~3			
90					
Applied contactors			MC-6a, 9a, 12a, 18a		
Separate mounting unit			UZ-12		

Note : Screw clamp and Lug types are available for the main terminals of 65AF, 100AF and 150AF relays.
The other AF relays provide Screw clamp types only.

	40AF		65AF		100AF	
	10A	20	10A	20	10A	20
	MT-32/2H□S	-	MT-63/2H□S/L	-	MT-95/2H□S/L	-
	MT-32/3H□S	-	MT-63/3H□S/L	-	MT-95/3H□S/L	-
	MT-32/3K□S	MT-32/3D□S	MT-63/3K□S/L	MT-63/3D□S/L	MT-95/3K□S/L	MT-95/3D□S/L
	Screw clamp		Screw/Lug clamp		Screw/Lug clamp	
	Screw clamp		Screw/Lug clamp		Screw/Lug clamp	
	Screw clamp		Screw clamp		Screw clamp	
	3		3		3	
	690V		690V		690V	
	Up to 690V		Up to 690V		Up to 690V	
	6kV		6kV		6kV	
	IP 20		IP 20		IP 20	
	-5~+40°C		-5~+40°C		-5~+40°C	
	■		■		■	
	■		■		■	
	■		■		■	
	■		■		■	
	0.1~40A	1~40A	4~65A		7~100A	
	0.1~0.16					
	0.16~0.25					
	0.25~0.4					
	0.4~0.63					
	0.63~1					
	1~1.6	1~1.6				
	1.6~2.5	1.6~2.5				
	2.5~4	2.5~4				
	4~6	4~6	4~6	4~6		
	5~8	5~8	5~8	5~8		
	6~9	6~9	6~9	6~9		
	7~10	7~10	7~10	7~10	7~10	7~10
	9~13	9~13	9~13	9~13	9~13	9~13
	12~18	12~18	12~18	12~18	12~18	12~18
	16~22	16~22	16~22	16~22	16~22	16~22
	18~25	18~25	18~25	18~25	18~25	18~25
	22~32	22~32	-	-	-	-
	-	-	24~36	24~36	24~36	24~36
	28~40	28~40	28~40	28~40	28~40	28~40
			34~50	34~50	34~50	34~50
			45~65	45~65	45~65	45~65
					54~75	54~75
					63~85	63~85
					70~95	70~95
					80~100	80~100
	MC-9b, 12b, 18b, 22b, 32a, 40a		MC-50a, 65a		MC-75a, 85a, 100a	
	UZ-32		UZ-63S/L		UZ-95S/L	

Overload relay specifications

MT type
Thermal overload relays

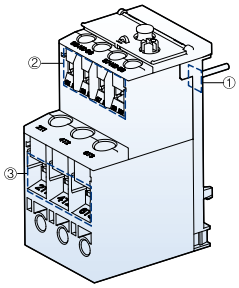

① Main terminals/upstream
② Auxiliary terminals
③ Main terminals/downstream

Frame size			150AF	
Trip class			10A	20
Type	Non-differential (3P-2 heater)		MT-150/2H□S/L	-
	Non-differential (3P-3 heater)		MT-150/3H□S/L	-
	Differential type		MT-150/3K□S/L	MT-150/3D□S/L
Terminals	Main-upstream		Screw/Lug clamp	
	Main-downstream		Screw/Lug clamp	
	Auxiliary		Screw clamp	
Number of poles			3	
Rated operating voltage (Ue)			690V	
Rated insulation voltage (Ui)			690V	
Rated impulse voltage (Uimp)			6kV	
Degree of protection (IEC 60 529)			IP 20	
Temperature compensation (°C)			-5~+40°C	
Functions	Trip indicating		■	
	Stop		■	
	Test		■	
	Manual/Automatic reset		■	
Setting range(A)			34~150A	34~150A
Nominal current rating	Wire size			
	mm²	AWG		
42	10	8	34~50	
55	16	6	45~65	
65	25	4	54~75	
74	25	4	63~85	
80	35	3	-	
93	35	2	80~105	
107	50	1	-	
113	50	1	95~130	
130	50	0	110~150	
130	70	00		
153	95	000		
200	120	250		
265	185	350		
350	240	500		
515	185×2n	350×2n		
660	240×2n	300×3n		
Applied contactors			MC-130a, 150a	
Separate mounting unit			UZ-150S/L	

Note : Screw clamp and Lug types are available for the main terminals of 65AF, 100AF and 150AF relays.
The other AF relays provide Screw clamp types only.

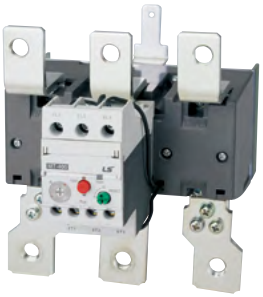

	225AF		400AF		800AF	
	10A	20	10A	20	10A	20
	MT-225/2H□S	-	MT-400/2H□S	-	MT-800/2H□S/L	-
	MT-225/3H□S	-	MT-400/3H□S	-	MT-800/3H□S/L	-
	MT-225/3K□S	MT-225/3D□S	MT-400/3K□S	MT-400/3D□S	MT-800/3K□S/L	MT-800/3D□S/L
	Screw clamp		Screw clamp		Screw clamp	
	Screw clamp		Screw clamp		Screw clamp	
	Screw clamp		Screw clamp		Screw clamp	
	3		3		3	
	690V		690V		690V	
	690V		690V		690V	
	6kV		6kV		6kV	
	IP 20		IP 20		IP 20	
	-5~+40°C		-5~+40°C		-5~+40°C	
	■		■		■	
	■		■		■	
	■		■		■	
	■		■		■	
	65~240A	65~240A	85~400A	85~400A	200~800A	200~800A
	65~100					
	-					
	85~125		85~125			
	-		-			
	-		-			
	100~160		100~160			
	120~185		120~185			
	160~240		160~240			
			200~330		200~300	
			260~400		260~400	
					400~600	
					520~800	
	MC-185a, 225a		MC-265a, 330a, 400a		MC-500a, 630a, 800a	
	-		-		-	

Overload relay operation

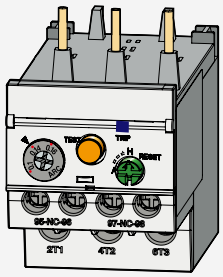

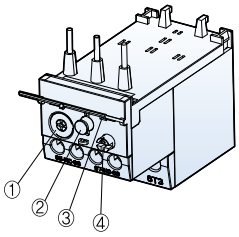

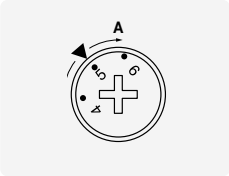

1. Adjustment dial

- Before adjusting the dial open the protection cover.
- Current setting can be configured by using (+) or (-) driver and is set based on dotted standard graduation.
- Do not rotate the dial out of the setting range.

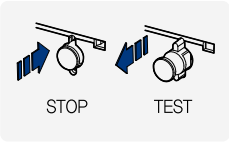

2. Stop/Test button

- STOP function is executed by pushing the button, which causes the next sequence.
- Pull button for test operation.

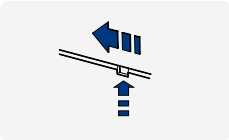

3.Trip indicator

- If relay is tripped it comes out.

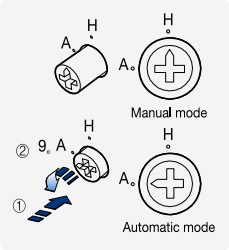

4. Reset button/Selector

- Reset mode can be set using a driver.
- In case of Manual mode (H), push the button to reset the relay.
- To change to Automatic mode (A) from Manual mode push the button and rotate as shown in the fig.

5. Auxiliary contact operation

Terminal no.	Normal	Stop	Test/Trip	Reset
NC 95-96				
NO 97-98				

Separate mounting units

These accessories are used to mount the relays separately from contactors.
If a relay is combined with a unit, it can be mounted on DIN rail or panel by fixing screws.

Relay	Unit	
	Type	Weight
MT-12/2H□ MT-12/3H□ MT-12/3K□ MT-12/3D□	UZ-12	35g
MT-32/2H□ MT-32/3H□ MT-32/3K□ MT-32/3D□	UZ-32	68g
MT-63/2H□ MT-63/3H□ MT-63/3K□ MT-63/3D□	UZ-63S/L	134g
MT-95/2H□ MT-95/3H□ MT-95/3K□ MT-95/3D□	UZ-95S/L	230g
MT-150/2H□ MT-150/3H□ MT-150/3K□ MT-150/3D□	UZ-150S/L	284g

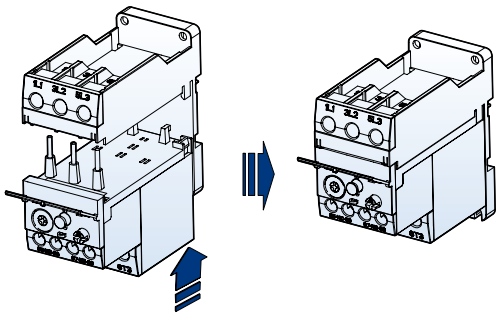

Terminal cover units for overload relays

Relay	Remarks
MT-225	2 pcs
MT-400	

Accessories for overload relay

Remote reset units

These accessories are used to reset the relays on the panel door.

Type	Cable length (L)
UM-4R	400 mm
UM-5R	500 mm
UM-6R	600 mm
UM-7R	700 mm
UM-9R	900 mm

1. Set the reset bar straight at least 55mm from the panel door and 35mm from the bracket.
2. The bending radius of the flexible reset bar should not be less than 15mm.

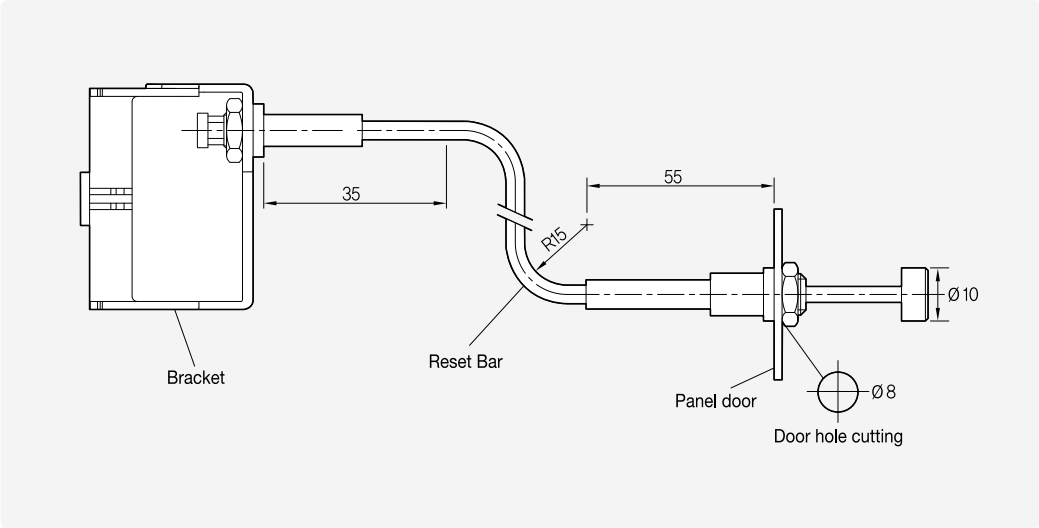

Installation

1. Secure the bracket with the relay as indicated (*1) below.
2. Separate Nut (*3) and Head cap (*4) from the reset bar. Insert the reset bar into the panel hole,then fix it with the nut and head.
3. To separate the bracket from the relay lift the *2 part as shown in the fig.

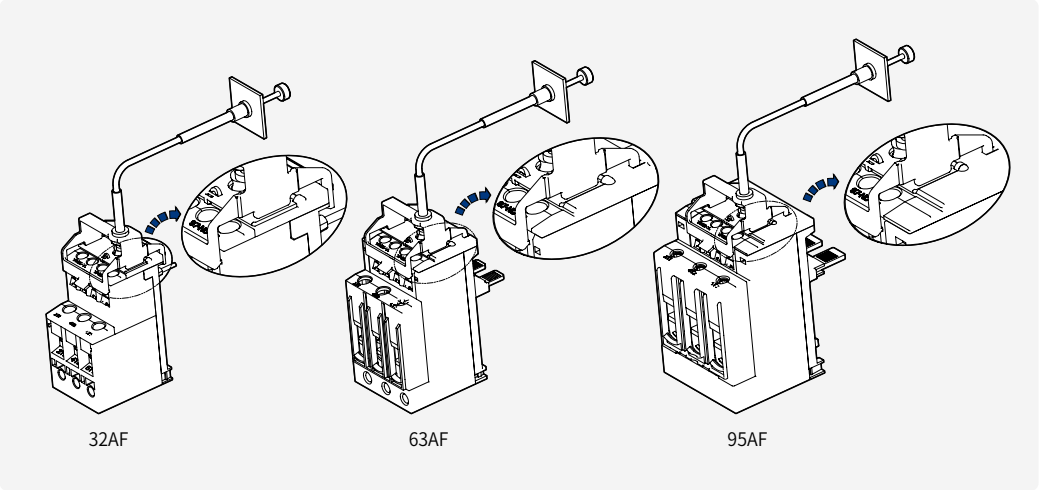

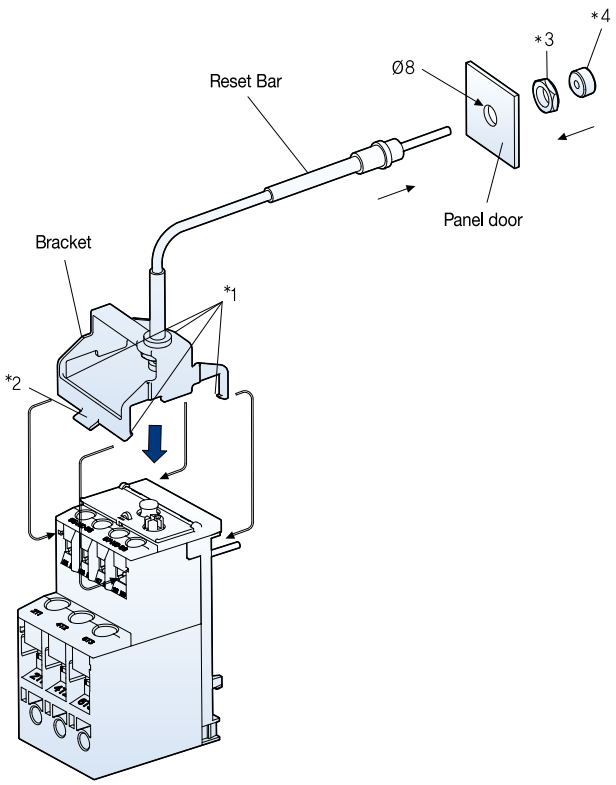

Remote reset units

MT-32

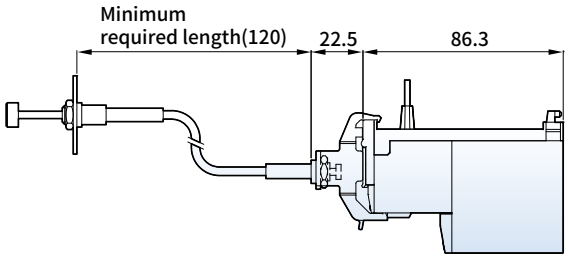

MT-63

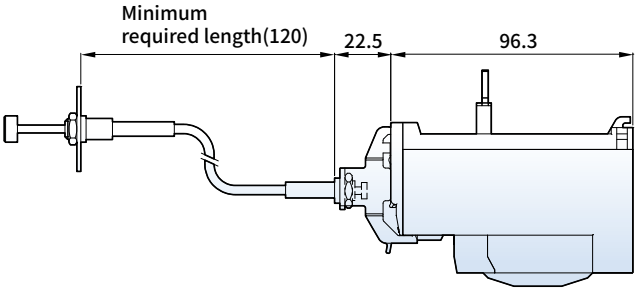

MT-95

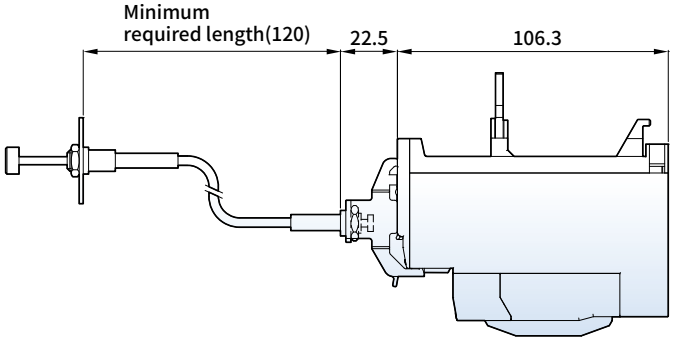

MT-150

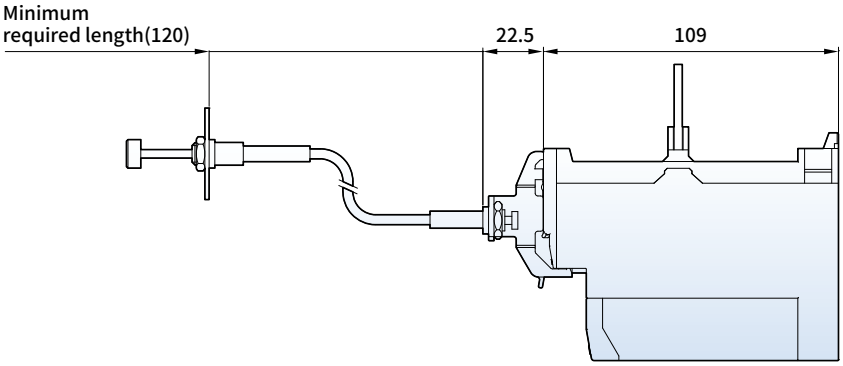

MT-225

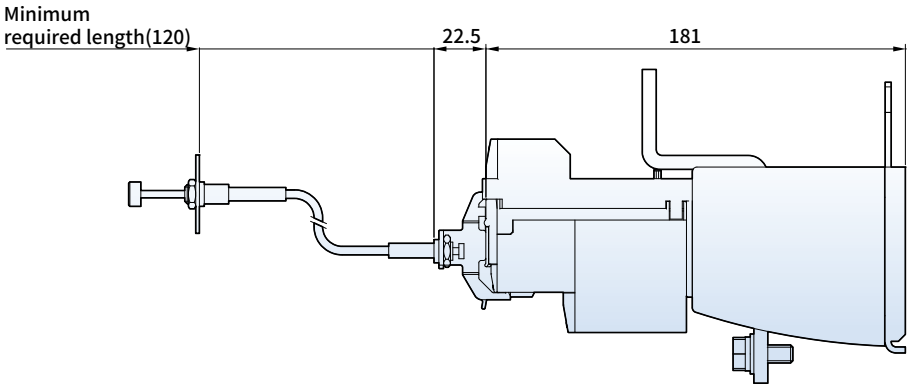

MT-400

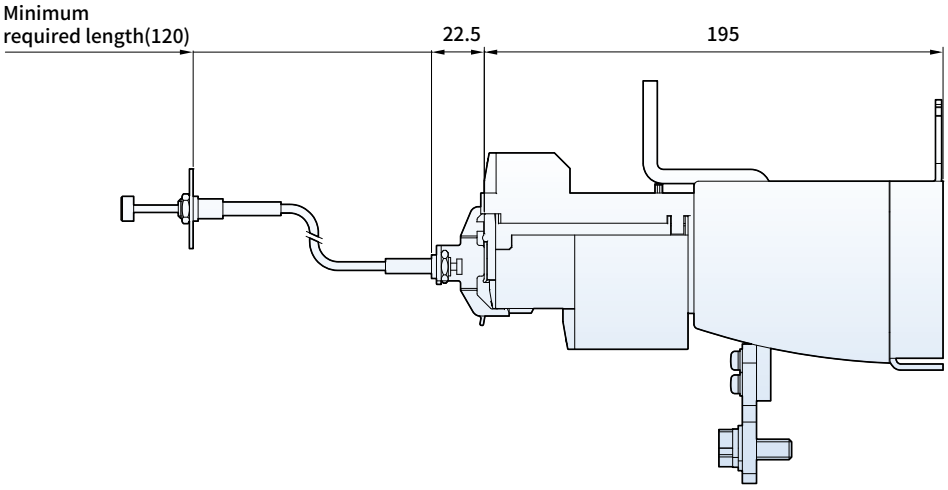

MT-800

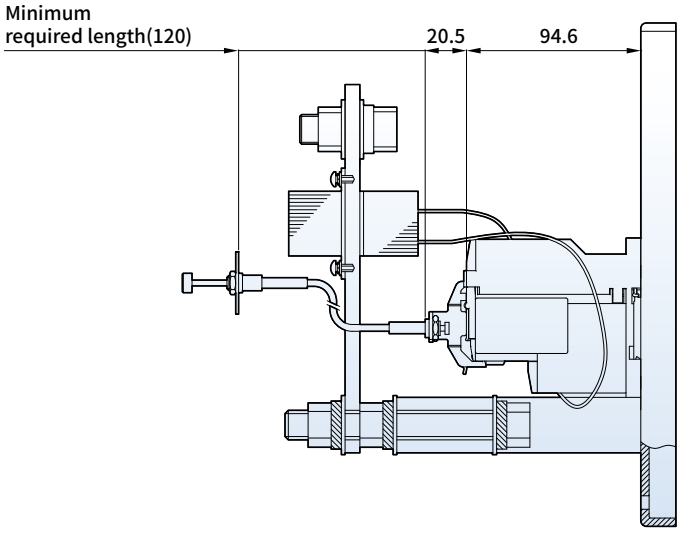

Overload relay ordering types

Trip class 10A

MT-12/□

MT-12 (Terminal type: Screw / IP20 rated)

Setting range (A)	Ordering type			Contactor	Separate mounting unit
	Non-differential (3P-2 heater)	Non-differential (3P-3 heater)	Differential		
0.1~0.16	MT-12/2H0.14	MT-12/3H0.14	MT-12/3K0.14	MC-6a MC-9a MC-12a MC-18a	UZ-12
0.16~0.25	MT-12/2H0.21	MT-12/3H0.21	MT-12/3K0.21		
0.25~0.4	MT-12/2H0.33	MT-12/3H0.33	MT-12/3K0.33		
0.4~0.63	MT-12/2H0.52	MT-12/3H0.52	MT-12/3K0.52		
0.63~1	MT-12/2H0.82	MT-12/3H0.82	MT-12/3K0.82		
1~1.6	MT-12/2H1.3	MT-12/3H1.3	MT-12/3K1.3		
1.6~2.5	MT-12/2H2.1	MT-12/3H2.1	MT-12/3K2.1		
2.5~4	MT-12/2H3.3	MT-12/3H3.3	MT-12/3K3.3		
4~6	MT-12/2H5	MT-12/3H5	MT-12/3K5		
5~8	MT-12/2H6.5	MT-12/3H6.5	MT-12/3K6.5		
6~9	MT-12/2H7.5	MT-12/3H7.5	MT-12/3K7.5		
7~10	MT-12/2H8.5	MT-12/3H8.5	MT-12/3K8.5		
9~13	MT-12/2H11	MT-12/3H11	MT-12/3K11		
12~18	MT-12/2H15	MT-12/3H15	MT-12/3K15		

MT-32/□

MT-32 (Terminal type: Screw / IP20 rated)

Setting range (A)	Ordering type			Contactor	Separate mounting unit
	Non-differential (3P-2 heater)	Non-differential (3P-3 heater)	Differential		
0.1~0.16	MT-32/2H0.14	MT-32/3H0.14	MT-32/3K0.14	MC-9b MC-12b MC-18b MC-22b MC-32a MC-40a	UZ-32
0.16~0.25	MT-32/2H0.21	MT-32/3H0.21	MT-32/3K0.21		
0.25~0.4	MT-32/2H0.33	MT-32/3H0.33	MT-32/3K0.33		
0.4~0.63	MT-32/2H0.52	MT-32/3H0.52	MT-32/3K0.52		
0.63~1	MT-32/2H0.82	MT-32/3H0.82	MT-32/3K0.82		
1~1.6	MT-32/2H1.3	MT-32/3H1.3	MT-32/3K1.3		
1.6~2.5	MT-32/2H2.1	MT-32/3H2.1	MT-32/3K2.1		
2.5~4	MT-32/2H3.3	MT-32/3H3.3	MT-32/3K3.3		
4~6	MT-32/2H5	MT-32/3H5	MT-32/3K5		
5~8	MT-32/2H6.5	MT-32/3H6.5	MT-32/3K6.5		
6~9	MT-32/2H7.5	MT-32/3H7.5	MT-32/3K7.5		
7~10	MT-32/2H8.5	MT-32/3H8.5	MT-32/3K8.5		
9~13	MT-32/2H11	MT-32/3H11	MT-32/3K11		
12~18	MT-32/2H15	MT-32/3H15	MT-32/3K15		
16~22	MT-32/2H19	MT-32/3H19	MT-32/3K19		
18~25	MT-32/2H21.5	MT-32/3H21.5	MT-32/3K21.5		
22~32	MT-32/2H27	MT-32/3H27	MT-32/3K27		
28~40	MT-32/2H34	MT-32/3H34	MT-32/3K34		UZ-32(34A)

MT-63/□S

MT-63/□L

MT-63 (Terminal type: Screw(S), Lug(L) / IP20 rated)

Setting range (A)	Ordering type			Contactor	Separate mounting unit
	Non-differential (3P-2 heater)	Non-differential (3P-3 heater)	Differential		
4~6	MT-63/2H5S/L	MT-63/3H5S/L	MT-63/3K5S/L	MC-50a MC-65a	UZ-63S/L
5~8	MT-63/2H6.5S/L	MT-63/3H6.5S/L	MT-63/3K6.5S/L		
6~9	MT-63/2H7.5S/L	MT-63/3H7.5S/L	MT-63/3K7.5S/L		
7~10	MT-63/2H8.5S/L	MT-63/3H8.5S/L	MT-63/3K8.5S/L		
9~13	MT-63/2H11S/L	MT-63/3H11S/L	MT-63/3K11S/L		
12~18	MT-63/2H15S/L	MT-63/3H15S/L	MT-63/3K15S/L		
16~22	MT-63/2H19S/L	MT-63/3H19S/L	MT-63/3K19S/L		
18~25	MT-63/2H21.5S/L	MT-63/3H21.5S/L	MT-63/3K21.5S/L		
24~36	MT-63/2H30S/L	MT-63/3H30S/L	MT-63/3K30S/L		
28~40	MT-63/2H34S/L	MT-63/3H34S/L	MT-63/3K34S/L		
34~50	MT-63/2H42S/L	MT-63/3H42S/L	MT-63/3K42S/L		
45~65	MT-63/2H55S/L	MT-63/3H55S/L	MT-63/3K55S/L		

MT-95/□S

MT-95/□L

MT-95 (Terminal type: Screw(S), Lug(L) / IP20 rated)

Setting range (A)	Ordering type			Contactor	Separate mounting unit
	Non-differential (3P-2 heater)	Non-differential (3P-3 heater)	Differential		
7~10	MT-95/2H8.5S/L	MT-95/3H8.5S/L	MT-95/3K8.5S/L	MC-75a MC-85a MC-100a	UZ-95S/L
9~13	MT-95/2H11S/L	MT-95/3H11S/L	MT-95/3K11S/L		
12~18	MT-95/2H15S/L	MT-95/3H15S/L	MT-95/3K15S/L		
16~22	MT-95/2H19S/L	MT-95/3H19S/L	MT-95/3K19S/L		
18~25	MT-95/2H21.5S/L	MT-95/3H21.5S/L	MT-95/3K21.5S/L		
24~36	MT-95/2H30S/L	MT-95/3H30S/L	MT-95/3K30S/L		
28~40	MT-95/2H34S/L	MT-95/3H34S/L	MT-95/3K34S/L		
34~50	MT-95/2H42S/L	MT-95/3H42S/L	MT-95/3K42S/L		
45~65	MT-95/2H55S/L	MT-95/3H55S/L	MT-95/3K55S/L		
54~75	MT-95/2H65S/L	MT-95/3H65S/L	MT-95/3K65S/L		
63~85	MT-95/2H74S/L	MT-95/3H74S/L	MT-95/3K74S/L		
70~95	MT-95/2H83S/L	MT-95/3H83S/L	MT-95/3K83S/L		
80~100	MT-95/2H90S/L	MT-95/3H90S/L	MT-95/3K90S/L		

MT-150/□

MT-150 (Terminal type: Screw(S), Lug(L) / IP20 rated)

Setting range (A)	Ordering type			Contactor	Separate mounting unit
	Non-differential (3P-2 heater)	Non-differential (3P-3 heater)	Differential		
34~50	MT-150/2H42S/L	MT-150/3H42S/L	MT-150/3K42S/L	MC-130a MC-150a	UZ-150S/L
45~65	MT-150/2H55S/L	MT-150/3H55S/L	MT-150/3K55S/L		
54~75	MT-150/2H65S/L	MT-150/3H65S/L	MT-150/3K65S/L		
63~85	MT-150/2H74S/L	MT-150/3H74S/L	MT-150/3K74S/L		
80~105	MT-150/2H93S/L	MT-150/3H93S/L	MT-150/3K93S/L		
95~130	MT-150/2H113S/L	MT-150/3H113S/L	MT-150/3K113S/L		
110~150	MT-150/2H130S/L	MT-150/3H130S/L	MT-150/3K130S/L		

Overload relay ordering types

Trip class 10A

MT-225/□

MT-225 (Terminal type: Screw / IP20 rated)

Setting range (A)	Ordering type			Contactor	Notes
	Non-differential (3P-2 heater)	Non-differential (3P-3 heater)	Differential		
65~100	MT-225/2H80	MT-225/3H80	MT-225/3K80	MC-185a MC-225a	-
85~125	MT-225/2H107	MT-225/3H107	MT-225/3K107		
100~160	MT-225/2H130	MT-225/3H130	MT-225/3K130		
120~185	MT-225/2H153	MT-225/3H153	MT-225/3K153		
160~240	MT-225/2H200	MT-225/3H200	MT-225/3K200		

MT-400/□

MT-400 (Terminal type: Screw / IP20 rated)

Setting range (A)	Ordering type			Contactor	Notes
	Non-differential (3P-2 heater)	Non-differential (3P-3 heater)	Differential		
85~125	MT-400/2H107	MT-400/3H107	MT-400/3K107	MC-265a MC-330a MC-400a	-
100~160	MT-400/2H130	MT-400/3H130	MT-400/3K130		
120~185	MT-400/2H153	MT-400/3H153	MT-400/3K153		
160~240	MT-400/2H200	MT-400/3H200	MT-400/3K200		
200~330	MT-400/2H265	MT-400/3H265	MT-400/3K265		
260~400	MT-400/2H350	MT-400/3H350	MT-400/3K350		

MT-800/□

MT-800 (Terminal type: Screw / IP20 rated)

Setting range (A)	Ordering type			Contactor	Notes
	Non-differential (3P-2 heater)	Non-differential (3P-3 heater)	Differential		
200~330	MT-800/2H265	MT-800/3H265	MT-800/3K265	MC-500a MC-630a MC-800a	-
260~400	MT-800/2H350	MT-800/3H350	MT-800/3K350		
400~630	MT-800/2H515	MT-800/3H515	MT-800/3K515		
520~800	MT-800/2H660	MT-800/3H660	MT-800/3K660		

Trip class 20A

MT-12/3D□

MT-12 (Terminal type: Screw / IP20 rated)

Setting range (A)	Ordering type	Contactor	Separate mounting unit
	Differential		
1~1.6	MT-12/3D1.3	MC-6a MC-9a MC-12a MC-18a	UZ-12
1.6~2.5	MT-12/3D2.1		
2.5~4	MT-12/3D3.3		
4~6	MT-12/3D5		
5~8	MT-12/3D6.5		
6~9	MT-12/3D7.5		
7~10	MT-12/3D8.5		
9~13	MT-12/3D11		
12~18	MT-12/3D15		

MT-32/3D□

MT-32 (Terminal type: Screw / IP20 rated)

Setting range (A)	Ordering type	Contactor	Separate mounting unit
	Differential		
1~1.6	MT-32/3D1.3	MC-9b MC-12b MC-18b MC-22b MC-32a MC-40a	UZ-32
1.6~2.5	MT-32/3D2.1		
2.5~4	MT-32/3D3.3		
4~6	MT-32/3D5		
5~8	MT-32/3D6.5		
6~9	MT-32/3D7.5		
7~10	MT-32/3D8.5		
9~13	MT-32/3D11		
12~18	MT-32/3D15		
16~22	MT-32/3D19		
18~25	MT-32/3D21.5		
22~32	MT-32/3D27		
28~40	MT-32/3D34		UZ-32(34A)

Overload relay ordering types

Trip class 20A

MT-63/ S

MT-63/ L

MT-63 (Terminal type: Screw(S), Lug(L) / IP20 rated)

Setting range (A)	Ordering type	Contactor	Separate mounting unit
	Differential		
4~6	MT-63/3D5S/L	MC-50a MC-65a	UZ-63S/L
5~8	MT-63/3D6.5S/L		
6~9	MT-63/3D7.5S/L		
7~10	MT-63/3D8.5S/L		
9~13	MT-63/3D11S/L		
12~18	MT-63/3D15S/L		
16~22	MT-63/3D19S/L		
18~25	MT-63/3D21.5S/L		
24~36	MT-63/3D30S/L		
28~40	MT-63/3D34S/L		
34~50	MT-63/3D42S/L		
45~65	MT-63/3D55S/L		

MT-95/ S

MT-95/ L

MT-95 (Terminal type: Screw(S), Lug(L) / IP20 rated)

Setting range (A)	Ordering type	Contactor	Separate mounting unit
	Differential		
7~10	MT-95/3D8.5S/L	MC-75a MC-85a MC-100a	UZ-95S/L
9~13	MT-95/3D11S/L		
12~18	MT-95/3DK15S/L		
16~22	MT-95/3D19S/L		
18~25	MT-95/3D21.5S/L		
24~36	MT-95/3D30S/L		
28~40	MT-95/3D34S/L		
34~50	MT-95/3D42S/L		
45~65	MT-95/3D55S/L		
54~75	MT-95/3D65S/L		
63~85	MT-95/3D74S/L		
70~95	MT-95/3D83S/L		
80~100	MT-95/3D90S/L		

MT-150/ S

MT-150 (Terminal type: Screw(S), Lug(L) / IP20 rated)

Setting range (A)	Ordering type	Contactor	Separate mounting unit
	Differential		
34~50	MT-150/3D42S/L	MC-130a MC-150a	UZ-150S/L
45~65	MT-150/3D55S/L		
54~75	MT-150/3D65S/L		
63~85	MT-150/3D74S/L		
80~105	MT-150/3D93S/L		
95~130	MT-150/3D113S/L		
110~150	MT-150/3D130S/L		

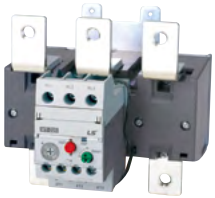

MT-225/3D

MT-225 (Terminal type: Screw / IP20 rated)

Setting range (A)	Ordering type	Contactor	Notes
	Differential		
65~100	MT-225/3D80	MC-185a MC-225a	-
85~125	MT-225/3D107		
100~160	MT-225/3D130		
120~185	MT-225/3D153		
160~240	MT-225/3D200		

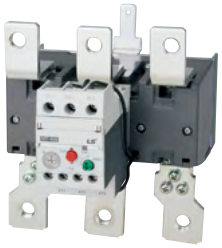

MT-400/3D

MT-400 (Terminal type: Screw / IP20 rated)

Setting range (A)	Ordering type	Contactor	Notes
	Differential		
85~125	MT-400/3D107	MC-265a MC-330a MC-400a	-
100~160	MT-400/3D130		
120~185	MT-400/3D153		
160~240	MT-400/3D200		
200~330	MT-400/3D265		
260~400	MT-400/3D350		

MT-800/3D

MT-800 (Terminal type: Screw / IP20 rated)

Setting range (A)	Ordering type	Contactor	Notes
	Differential		
200~330	MT-800/3D265	MC-500a MC-630a MC-800a	-
260~400	MT-800/3D350		
400~630	MT-800/3D515		
520~800	MT-800/3D660		

Overload relay trip curves

Class 10A, 18AF

MT-12/2H
MT-12/3H
MT-12/3K

Cold starting

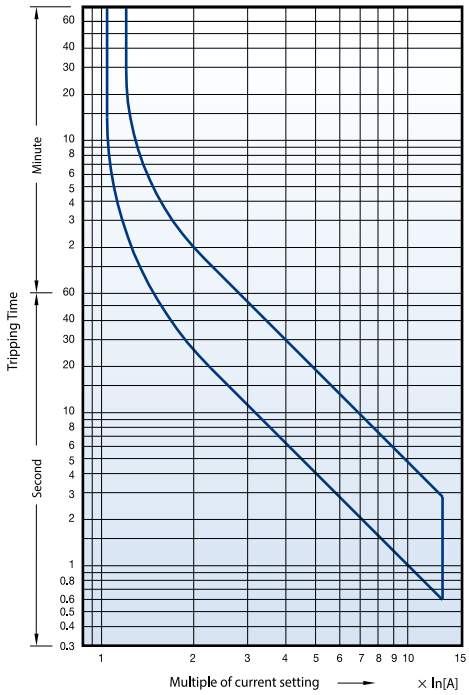

Hot starting

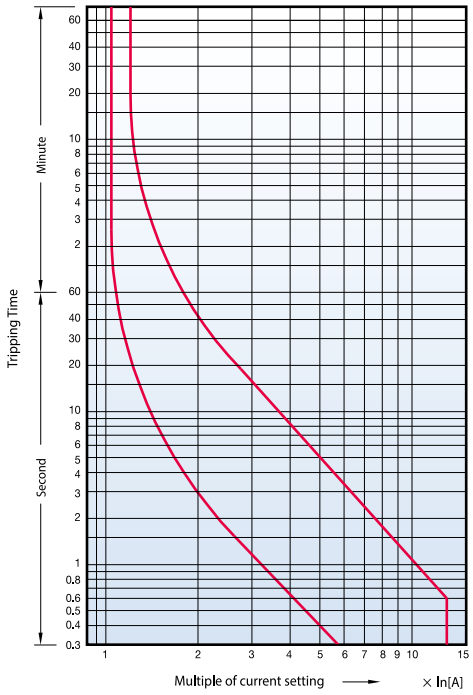

Class 20, 18AF

MT-12/3D

Cold starting

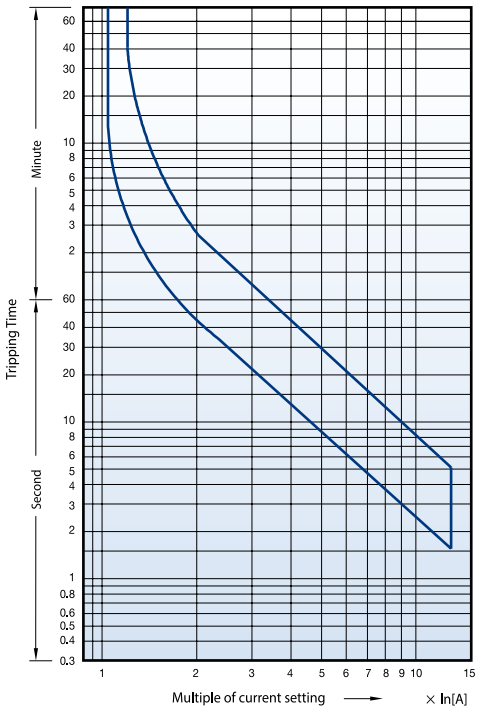

Hot starting

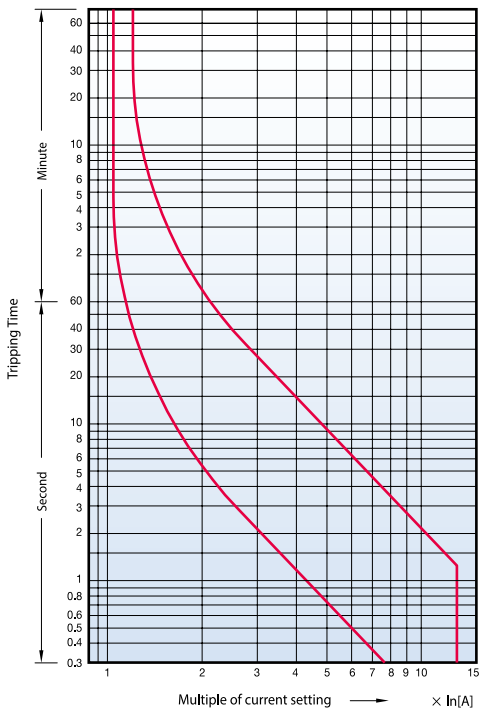

Class 10A, 40AF

MT-32/2H
MT-32/3H
MT-32/3K

Cold starting

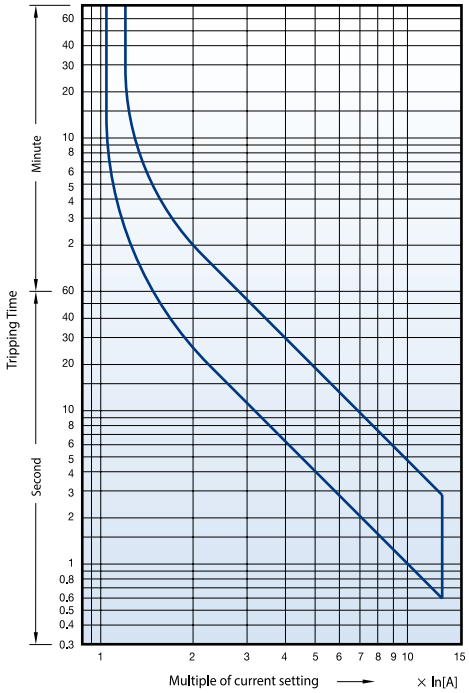

Hot starting

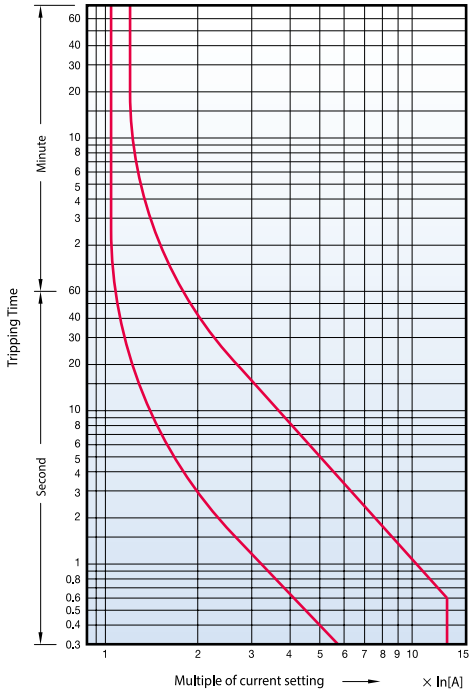

Class 20, 40AF

MT-32/3D

Cold starting

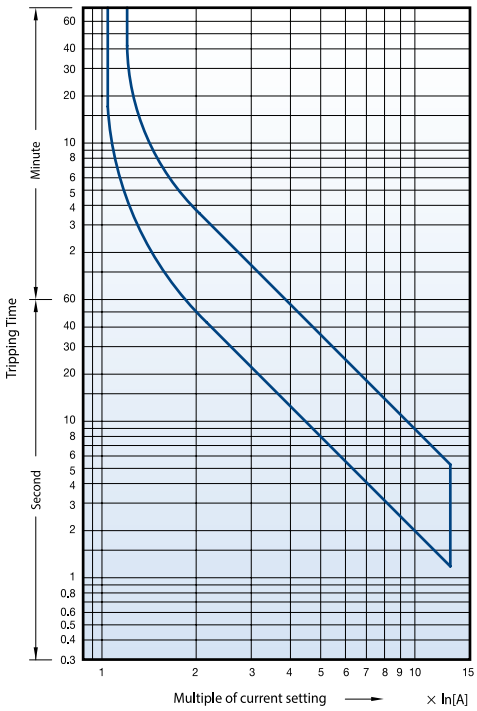

Hot starting

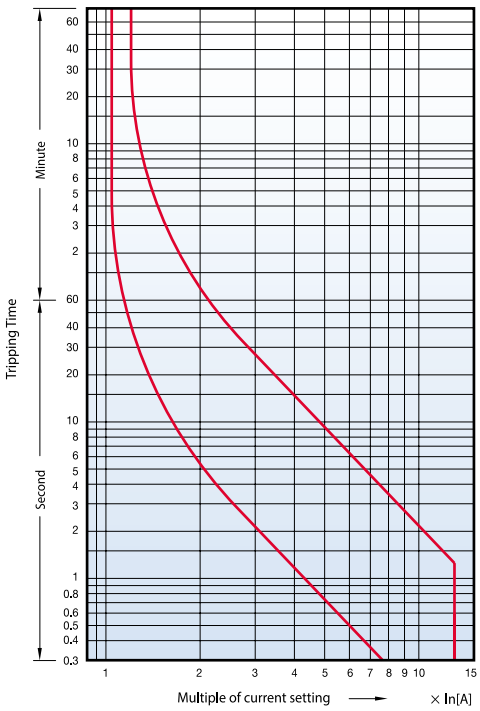

Overload relay trip curves

Class 10A, 65AF

MT-63/2H
MT-63/3H
MT-63/3K

Cold starting

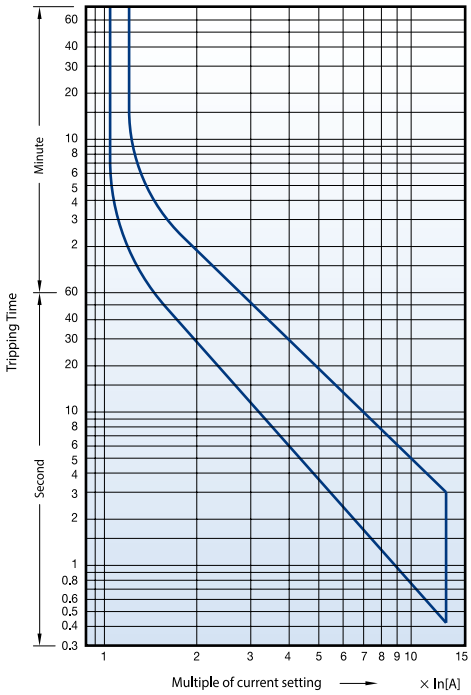

Hot starting

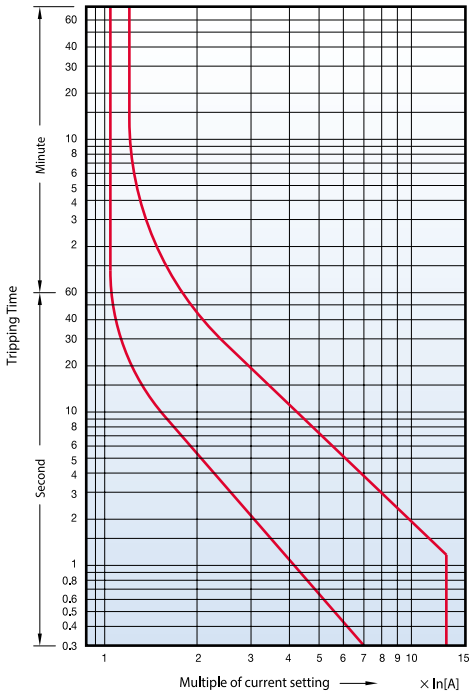

Class 20, 65AF

MT-63/3D

Cold starting

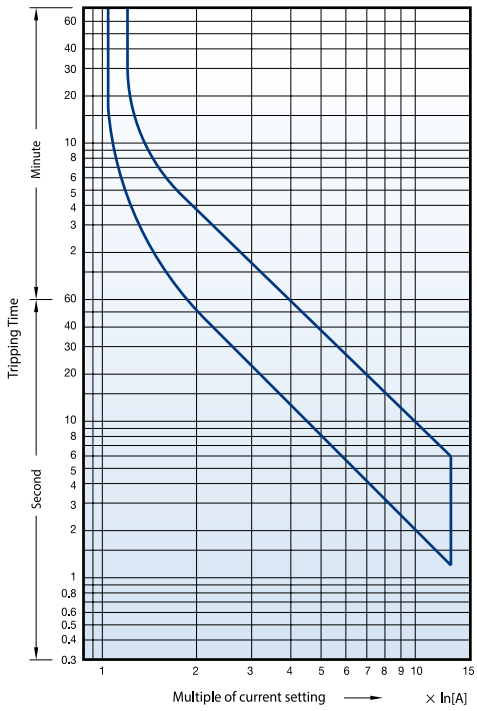

Hot starting

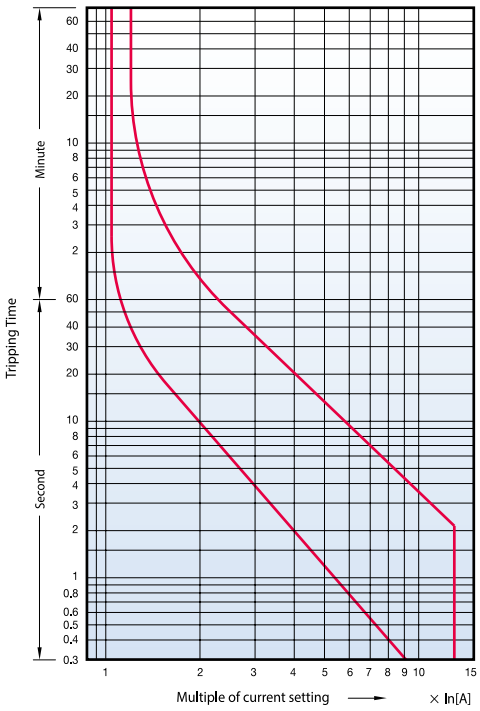

Class 10A, 100AF

MT-95/2H
MT-95/3H
MT-95/3K

Cold starting

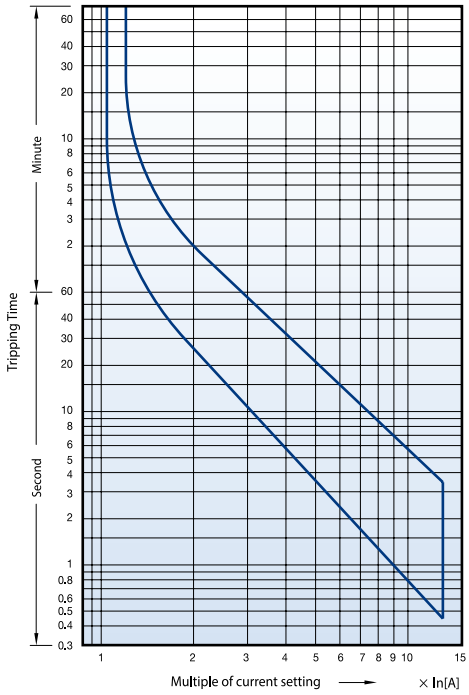

Hot starting

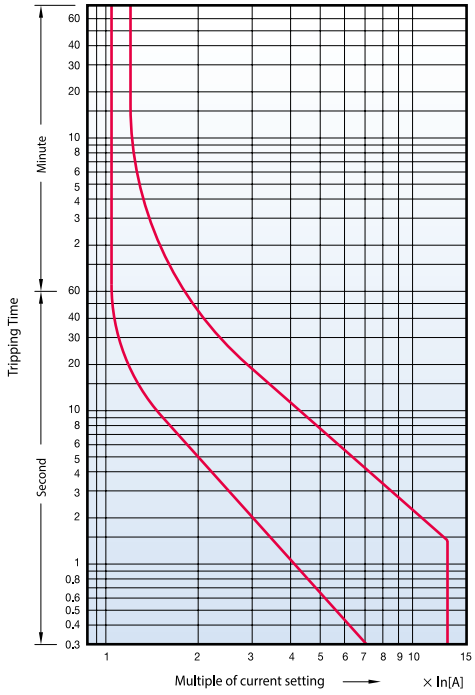

Class 20, 100AF

MT-95/3D

Cold starting

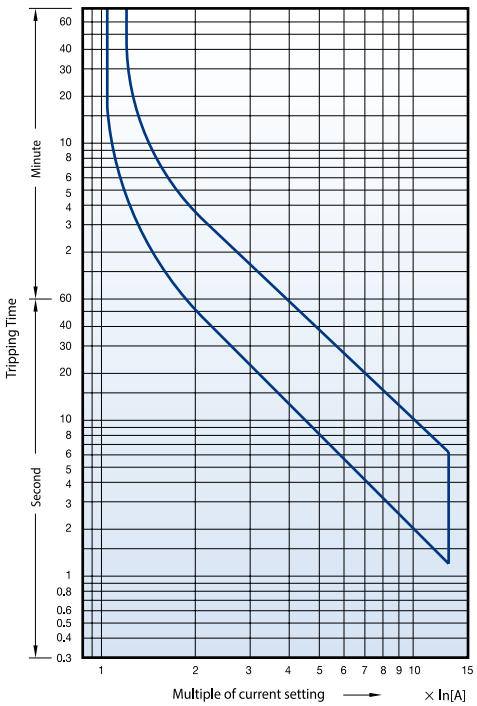

Hot starting

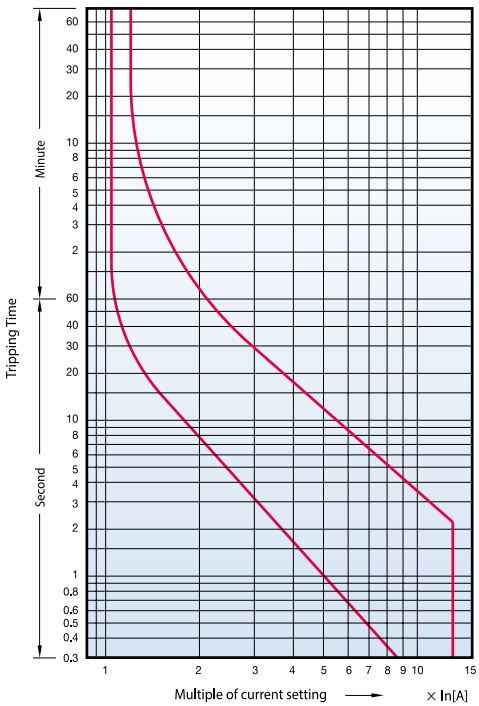

Overload relay trip curves

Class 10A, 150AF

MT-150/2H
MT-150/3H
MT-150/3K

Cold starting

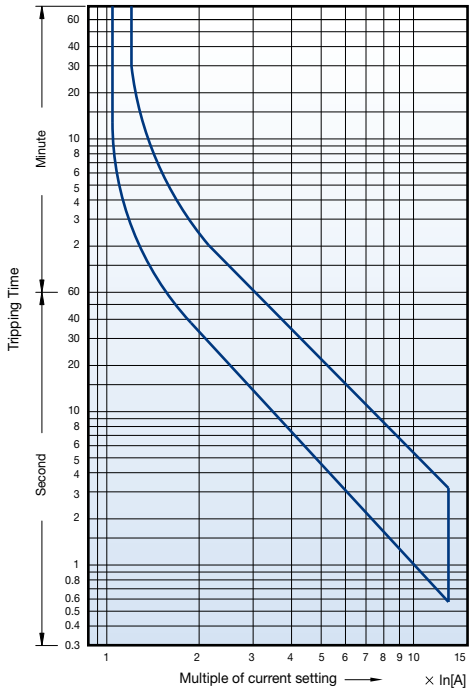

Hot starting

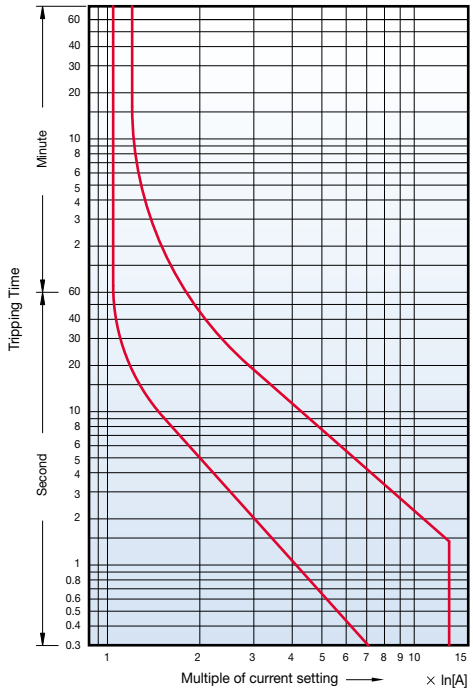

Class 20, 150AF

MT-150/3D

Cold starting

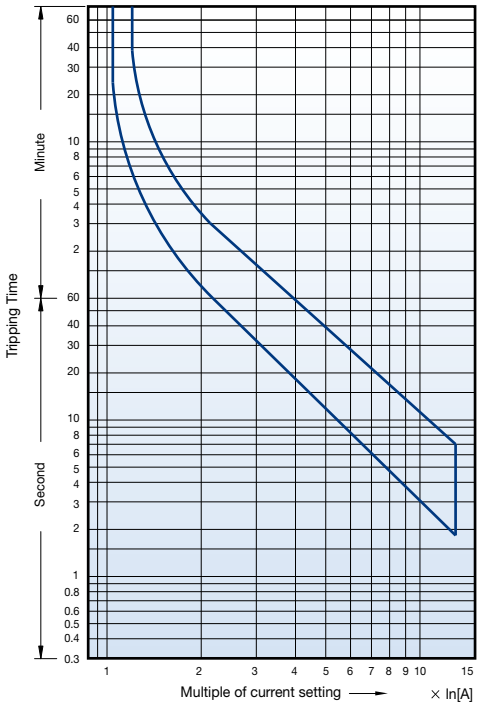

Hot starting

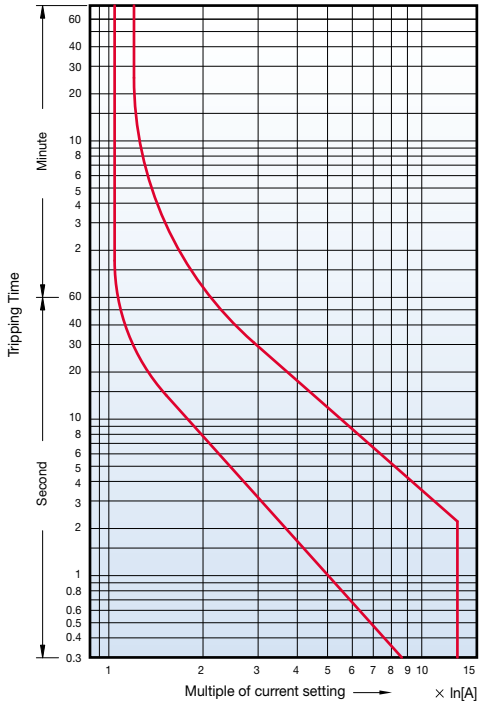

Class 10A, 225AF

MT-225/2H
MT-225/3H
MT-225/3K

Cold starting

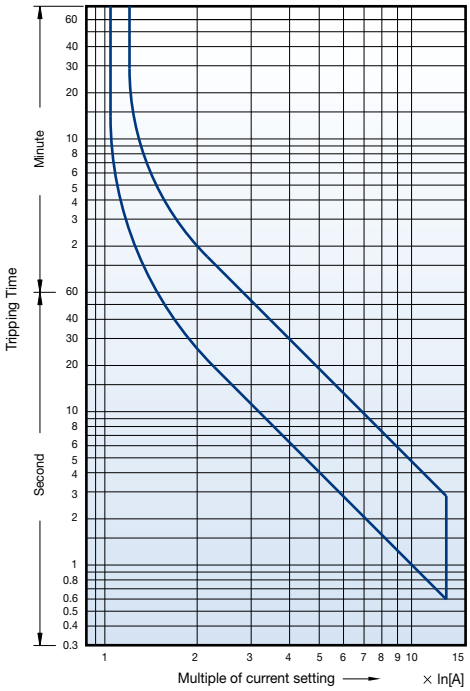

Hot starting

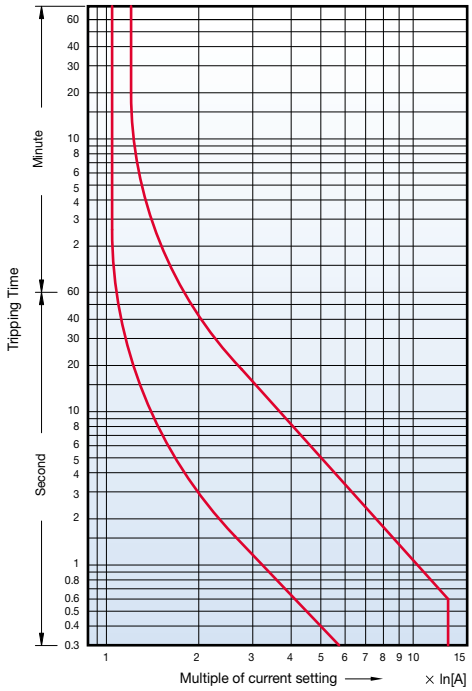

Class 20, 225AF

MT-225/3D

Cold starting

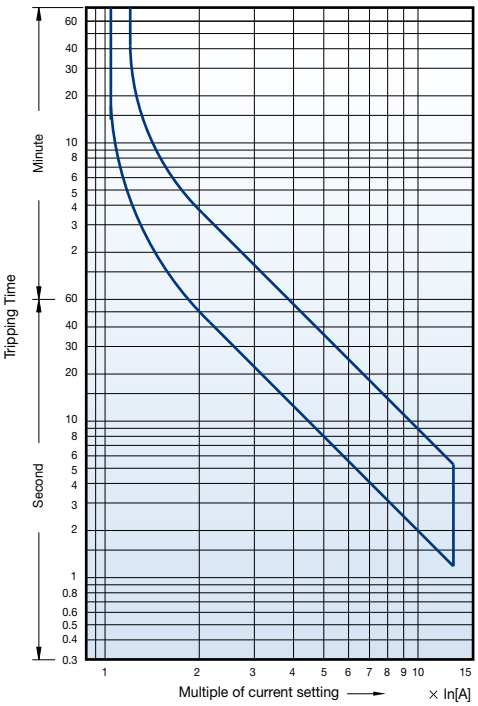

Hot starting

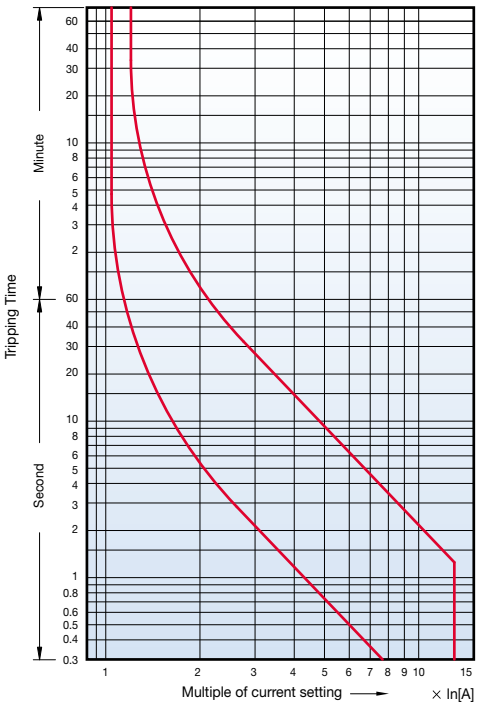

Overload relay trip curves

Class 10A, 400AF

MT-400/2H
MT-400/3H
MT-400/3K

Cold starting

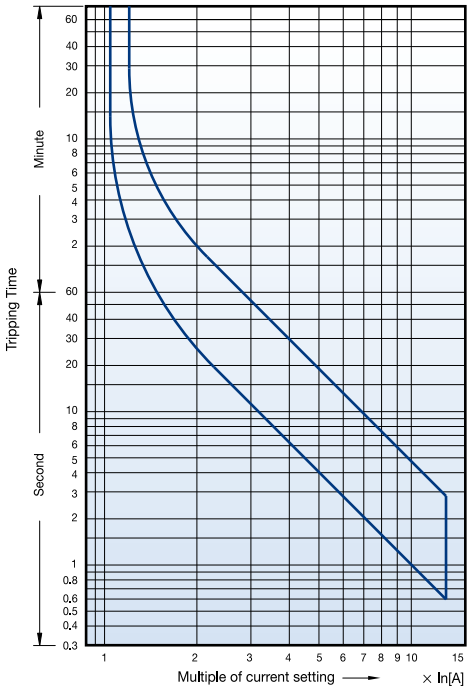

Hot starting

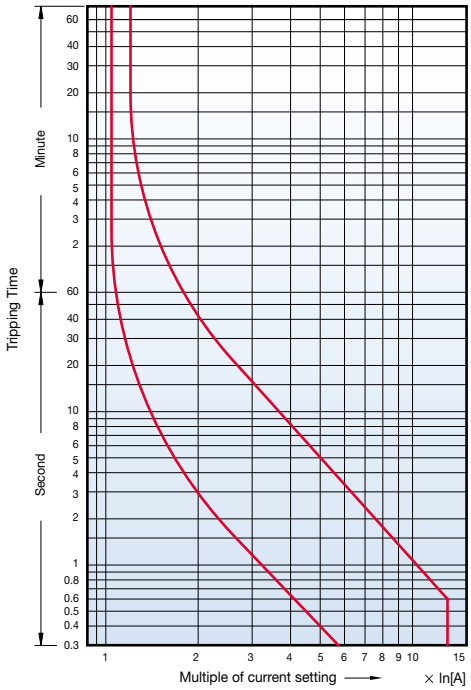

Class 20, 400AF

MT-400/3D

Cold starting

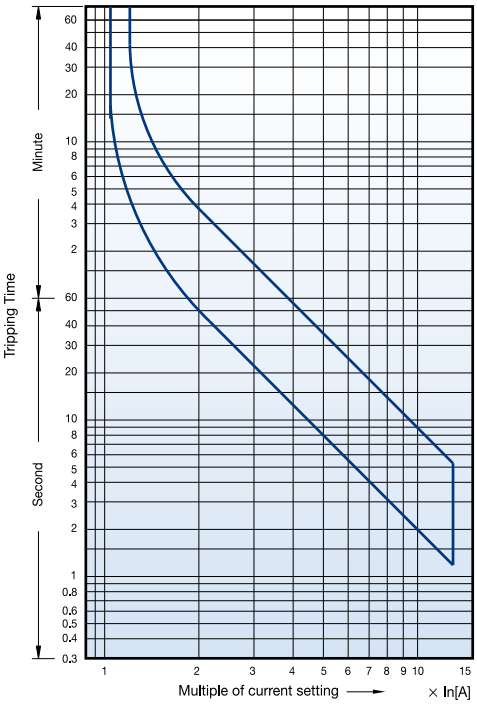

Hot starting

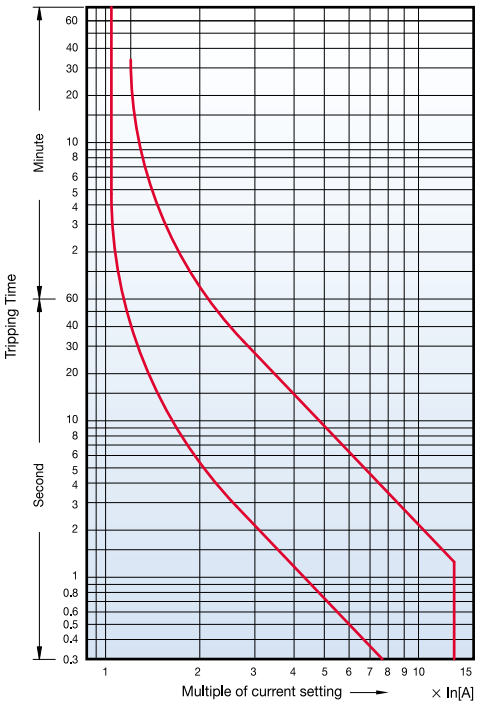

Class 10A, 800AF

MT-800/2H
MT-800/3H
MT-800/3K

Cold starting

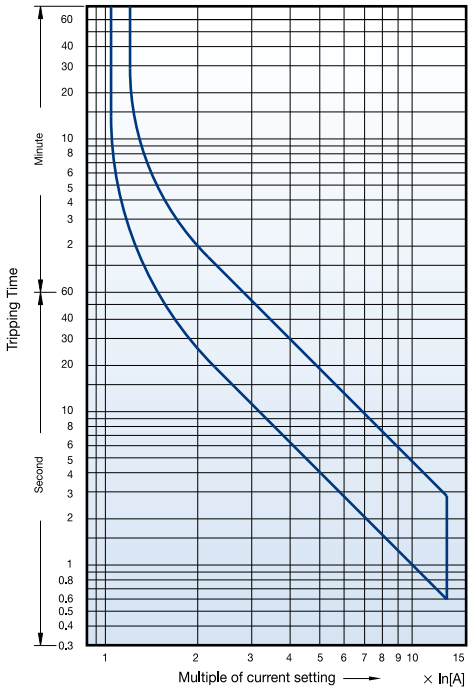

Hot starting

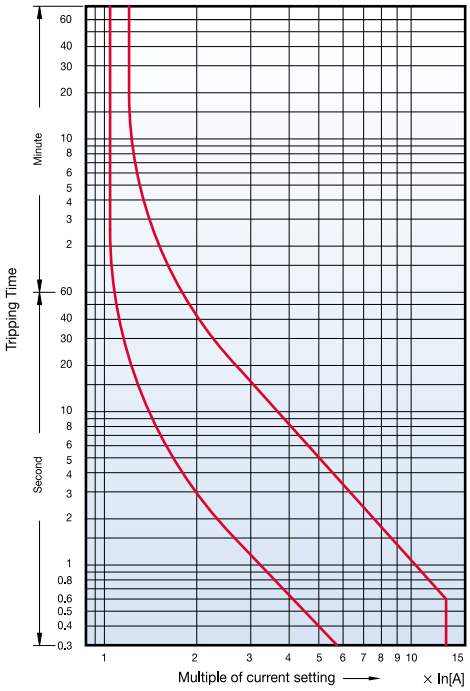

Class 20, 800AF

MT-800/3D

Cold starting

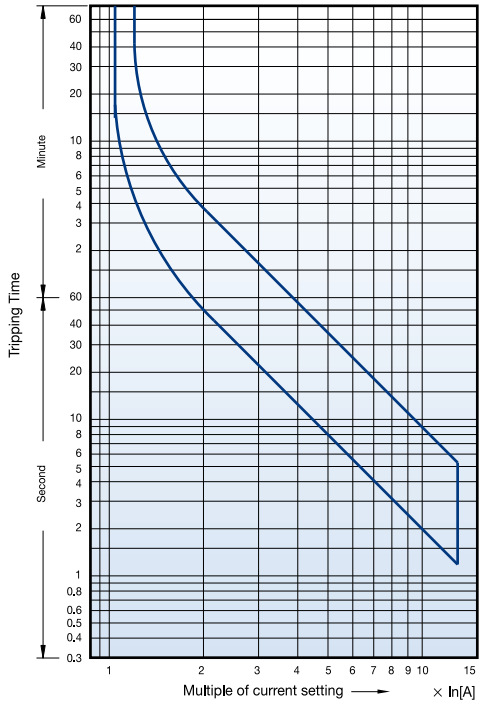

Hot starting

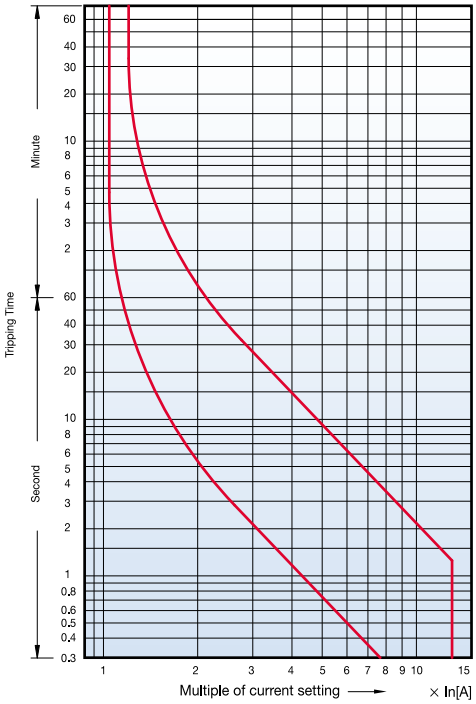

Type 2 coordination

440V

Susol MCCB N-type

Rated operating power		Circuit breaker		Contactor	Thermal overload relays		Short circuit breaking capacity	
kW	Current [A] 440V	Type	Rating [A]	Type	Type	Setting range [A]	Ir [kA]	Iq [kA]
1.1	2.37	TS100N	16	MC-12b	MT-32	2.5~4	1	50
1.5	3.06	TS100N	16	MC-18b	MT-32	2.5~4	1	50
2.2	4.42	TS100N	16	MC-22b	MT-32	4~6	1	50
3	5.77	TS100N	16	MC-22b	MT-32	5~8	1	50
4	7.90	TS100N	16	MC-32a	MT-32	6~9	1	50
5.5	10.40	TS100N	16	MC-32a	MT-32	9~13	3	50
7.5	13.70	TS100N	20	MC-32a	MT-32	12~18	3	50
11	20.10	TS100N	32	MC-40a	MT-32	18~25	3	50
15	26.50	TS100N	40	MC-40a	MT-32	22~32	3	50
18.5	32.80	TS100N	40	MC-50a	MT-63	28~40	3	50
22	39.00	TS100N	50	MC-50a	MT-63	34~50	3	50
30	51.50	TS100N	63	MC-65a	MT-63	45~65	3	50
37	64.00	TS100N	80	MC-75a	MT-95	54~75	5	50
45	76.00	TS100N	100	MC-85a	MT-95	63~85	5	50
55	90.00	TS100N	100	MC-100a	MT-95	70~95	5	50
59	97.00	TS160N	100	MC-130a	MT-150	80~105	5	50
75	125	TS160N	160	MC-150a	MT-150	110~150	10	50
90	146	TS160N	160	MC-185a	MT-225	120~185	10	50
110	178	TS250N	200	MC-185a	MT-225	160~240	10	50
132	215	TS250N	250	MC-225a	MT-225	160~240	10	65
160	256	TS400N	300	MC-400a	MT-400	200~330	18	65
200	330	TS400N	400	MC-400a	MT-400	260~400	18	65
220	353	TS400N	400	MC-400a	MT-400	260~400	18	65
250	401	TS630N	500	MC-630a	MT-800	260~400	18	65
300	481	TS630N	500	MC-630a	MT-800	400~630	18	65

440V

Susol MCCB H-type

Rated operating power		Circuit breaker		Contactor	Thermal overload relays		Short circuit breaking capacity	
kW	Current [A] 440V	Type	Rating [A]	Type	Type	Setting range [A]	Ir [kA]	Iq [kA]
1.1	2.37	TS100H	16	MC-12b	MT-32	2.5~4	1	50
1.5	3.06	TS100H	16	MC-18b	MT-32	2.5~4	1	50
2.2	4.42	TS100H	16	MC-22b	MT-32	4~6	1	50
3	5.77	TS100H	16	MC-22b	MT-32	5~8	1	50
4	7.90	TS100H	16	MC-32a	MT-32	6~9	1	50
5.5	10.40	TS100H	16	MC-32a	MT-32	9~13	3	50
7.5	13.70	TS100H	20	MC-32a	MT-32	12~18	3	70
11	20.10	TS100H	32	MC-40a	MT-32	18~25	3	70
15	26.50	TS100H	40	MC-40a	MT-32	22~32	3	70
18.5	32.80	TS100H	40	MC-50a	MT-63	28~40	3	70
22	39.00	TS100H	50	MC-50a	MT-63	34~50	3	70
30	51.50	TS100H	63	MC-65a	MT-63	45~65	3	70
37	64.00	TS100H	80	MC-75a	MT-95	54~75	5	70
45	76.00	TS100H	100	MC-85a	MT-95	63~85	5	70
55	90.00	TS100H	100	MC-100a	MT-95	70~95	5	70
59	97.00	TS160H	100	MC-130a	MT-150	80~105	5	70
75	125	TS160H	160	MC-150a	MT-150	110~150	10	70
90	146	TS160H	160	MC-185a	MT-225	120~185	10	70
110	178	TS250H	200	MC-185a	MT-225	160~240	10	70
132	215	TS250H	250	MC-225a	MT-225	160~240	10	70
160	256	TS400H	300	MC-400a	MT-400	200~330	18	85
200	330	TS400H	400	MC-400a	MT-400	260~400	18	85
220	353	TS400H	400	MC-400a	MT-400	260~400	18	85
250	401	TS630H	500	MC-630a	MT-800	260~400	18	85
300	481	TS630H	500	MC-630a	MT-800	400~630	18	100

Type 2 Coordination

440V

Susol MCCB L-type

Rated operating power		Circuit breaker		Contactor	Thermal overload relays		Short circuit breaking capacity	
kW	Current [A] 440V	Type	Rating [A]	Type	Type	Setting range [A]	Ir [kA]	Iq [kA]
1.1	2.37	TS100L	16	MC-12b	MT-32	2.5~4	1	50
1.5	3.06	TS100L	16	MC-18b	MT-32	2.5~4	1	50
2.2	4.42	TS100L	16	MC-22b	MT-32	4~6	1	50
3	5.77	TS100L	16	MC-22b	MT-32	5~8	1	50
4	7.90	TS100L	16	MC-32a	MT-32	6~9	1	50
5.5	10.40	TS100L	16	MC-32a	MT-32	9~13	3	50
7.5	13.70	TS100L	20	MC-32a	MT-32	12~18	3	100
11	20.10	TS100L	32	MC-40a	MT-32	18~25	3	100
15	26.50	TS100L	40	MC-40a	MT-32	22~32	3	100
18.5	32.80	TS100L	40	MC-50a	MT-63	28~40	3	130
22	39.00	TS100L	50	MC-50a	MT-63	34~50	3	130
30	51.50	TS100L	63	MC-65a	MT-63	45~65	3	130
37	64.00	TS100L	80	MC-75a	MT-95	54~75	5	130
45	76.00	TS100L	100	MC-85a	MT-95	63~85	5	130
55	90.00	TS100L	100	MC-100a	MT-95	70~95	5	130
59	97.00	TS160L	100	MC-130a	MT-150	80~105	5	130
75	125	TS160L	160	MC-150a	MT-150	110~150	10	130
90	146	TS160L	160	MC-185a	MT-225	120~185	10	130
110	178	TS250L	200	MC-185a	MT-225	160~240	10	130
132	215	TS250L	250	MC-225a	MT-225	160~240	10	130
160	256	TS400L	300	MC-400a	MT-400	200~330	18	130
200	330	TS400L	400	MC-400a	MT-400	260~400	18	130
220	353	TS400L	400	MC-400a	MT-400	260~400	18	130
250	401	TS630L	500	MC-630a	MT-800	260~400	18	130
300	481	TS630L	500	MC-630a	MT-800	400~630	18	130

440V

Metasol MCCB N-type

Rated operating power		Circuit breaker		Contactor	Thermal overload relays		Short circuit breaking capacity	
kW	Current [A] 440V	Type	Rating [A]	Type	Type	Setting range [A]	Ir [kA]	Iq [kA]
1.1	2.37	ABN53c	15	MC-12b	MT-32	2.5~4	1	14
1.5	3.06	ABN53c	15	MC-18b	MT-32	2.5~4	1	14
2.2	4.42	ABN53c	15	MC-22b	MT-32	4~6	1	14
3.0	5.77	ABN53c	15	MC-22b	MT-32	5~8	1	14
4.0	7.90	ABN53c	15	MC-32a	MT-32	6~9	1	14
5.5	10.40	ABN53c	15	MC-32a	MT-32	9~13	3	14
7.5	13.70	ABN53c	20	MC-32a	MT-32	12~18	3	14
11.0	20.10	ABN103c	30	MC-40a	MT-32	18~25	3	18
15.0	26.50	ABN103c	40	MC-40a	MT-32	22~32	3	18
18.5	32.80	ABN103c	40	MC-50a	MT-63	28~40	3	18
22.0	39.00	ABN103c	50	MC-50a	MT-63	34~50	3	18
30.0	51.50	ABN103c	75	MC-65a	MT-63	45~65	3	18
37.0	64.00	ABN103c	75	MC-75a	MT-95	54~75	5	18
45.0	76.00	ABN103c	100	MC-85a	MT-95	63~85	5	18
55.0	90.00	ABN103c	100	MC-100a	MT-95	70~95	5	18
59.0	97.00	ABN103c	100	MC-130a	MT-150	80~105	5	18
75.0	125	ABN203c	150	MC-150a	MT-150	110~150	10	26
90.0	146	ABN203c	200	MC-185a	MT-225	120~185	10	26
110.0	178	ABN203c	200	MC-185a	MT-225	160~240	10	26
132.0	215	ABN203c	250	MC-225a	MT-225	160~240	10	26
160.0	256	ABN403c	300	MC-400a	MT-400	200~330	18	37
200.0	330	ABN403c	400	MC-400a	MT-400	260~400	18	37
220.0	353	ABN403c	400	MC-400a	MT-400	260~400	18	37
250.0	401	ABN803c	500	MC-630a	MT-800	260~400	18	37
300.0	481	ABN803c	500	MC-630a	MT-800	400~630	18	37

Type 2 Coordination

440V

Metasol MCCB S-type

Rated operating power		Circuit breaker		Contactor	Thermal overload relays		Short circuit breaking capacity	
kW	Current [A] 440V	Type	Rating [A]	Type	Type	Setting range [A]	Ir [kA]	Iq [kA]
1.1	2.37	ABS53c	15	MC-12b	MT-32	2.5~4	1	18
1.5	3.06	ABS53c	15	MC-18b	MT-32	2.5~4	1	18
2.2	4.42	ABS53c	15	MC-22b	MT-32	4~6	1	18
3.0	5.77	ABS53c	15	MC-22b	MT-32	5~8	1	18
4.0	7.90	ABS53c	15	MC-32a	MT-32	6~9	1	18
5.5	10.40	ABS53c	15	MC-32a	MT-32	9~13	3	18
7.5	13.70	ABS53c	20	MC-32a	MT-32	12~18	3	18
11.0	20.10	ABS103c	30	MC-40a	MT-32	18~25	3	37
15.0	26.50	ABS103c	40	MC-40a	MT-32	22~32	3	37
18.5	32.80	ABS103c	40	MC-50a	MT-63	28~40	3	37
22.0	39.00	ABS103c	50	MC-50a	MT-63	34~50	3	37
30.0	51.50	ABS103c	75	MC-65a	MT-63	45~65	3	37
37.0	64.00	ABS103c	75	MC-75a	MT-95	54~75	5	37
45.0	76.00	ABS103c	100	MC-85a	MT-95	63~85	5	37
55.0	90.00	ABS103c	100	MC-100a	MT-95	70~95	5	37
59.0	97.00	ABS103c	100	MC-130a	MT-150	80~105	5	37
75.0	125	ABS203c	150	MC-150a	MT-150	110~150	10	37
90.0	146	ABS203c	200	MC-185a	MT-225	120~185	10	37
110.0	178	ABS203c	200	MC-185a	MT-225	160~240	10	37
132.0	215	ABS203c	250	MC-225a	MT-225	160~240	10	37
160.0	256	ABS403c	300	MC-400a	MT-400	200~330	18	50
200.0	330	ABS403c	400	MC-400a	MT-400	260~400	18	50
220.0	353	ABS403c	400	MC-400a	MT-400	260~400	18	50
250.0	401	ABS803c	500	MC-630a	MT-800	260~400	18	65
300.0	481	ABS803c	500	MC-630a	MT-800	400~630	18	65

440V

Metasol MCCB H-type

Rated operating power		Circuit breaker		Contactor	Thermal overload relays		Short circuit breaking capacity	
kW	Current [A] 440V	Type	Rating [A]	Type	Type	Setting range [A]	Ir [kA]	Iq [kA]
1.1	2.37	ABH53c	15	MC-12b	MT-32	2.5~4	1	35
1.5	3.06	ABH53c	15	MC-18b	MT-32	2.5~4	1	35
2.2	4.42	ABH53c	15	MC-22b	MT-32	4~6	1	35
3	5.77	ABH53c	15	MC-22b	MT-32	5~8	1	35
4	7.90	ABH53c	15	MC-32a	MT-32	6~9	1	35
5.5	10.40	ABH53c	15	MC-32a	MT-32	9~13	3	35
7.5	13.70	ABH53c	20	MC-32a	MT-32	12~18	3	35
11	20.10	ABH103c	30	MC-40a	MT-32	18~25	3	50
15	26.50	ABH103c	40	MC-40a	MT-32	22~32	3	50
18.5	32.80	ABH103c	40	MC-50a	MT-63	28~40	3	50
22	39.00	ABH103c	50	MC-50a	MT-63	34~50	3	50
30	51.50	ABH103c	75	MC-65a	MT-63	45~65	3	50
37	64.00	ABH103c	75	MC-75a	MT-95	54~75	5	50
45	76.00	ABH103c	100	MC-85a	MT-95	63~85	5	50
55	90.00	ABH103c	100	MC-100a	MT-95	70~95	5	50
59	97.00	ABH103c	100	MC-130a	MT-150	80~105	5	50
75	125	ABH203c	150	MC-150a	MT-150	110~150	10	50
90	146	ABH203c	200	MC-185a	MT-225	120~185	10	50
110	178	ABH203c	200	MC-185a	MT-225	160~240	10	50
132	215	ABH203c	250	MC-225a	MT-225	160~240	10	50
160	256	ABL403c	300	MC-400a	MT-400	200~330	18	85
200	330	ABL403c	400	MC-400a	MT-400	260~400	18	85
220	353	ABL403c	400	MC-400a	MT-400	260~400	18	85
250	401	ABL803c	500	MC-630a	MT-800	260~400	18	85
300	481	ABL803c	500	MC-630a	MT-800	400~630	18	85

Type 2 coordination (MCi series)

Circuit breaker (ACB)			Contactor(MCi)		Short circuit
ACB type	CRADLE type	Rating(A)	Type	Rating(A)	Ir=Iq (kA)
AN-16C3-16A	AL-H16C3	1600	MCi-900	900	42
AN-16C3-16A	AL-H16C3	1600	MCi-1050	1050	42
AN-16C3-16A	AL-H16C3	1600	MCi-1260	1260	42
AH-32E3-32A	AL-H06~32E3	3200	MCi-1700	1700	42
AH-32E3-32A	AL-H06~32E3	3200	MCi-2100	2100	42
AH-32E3-32A	AL-H06~32E3	3200	MCi-2650	2650	42

* Breaker (ACB) Model AN-16C3-16A when the OCR Override setting is "On"

Rated UL 508 combination motor controller type-C

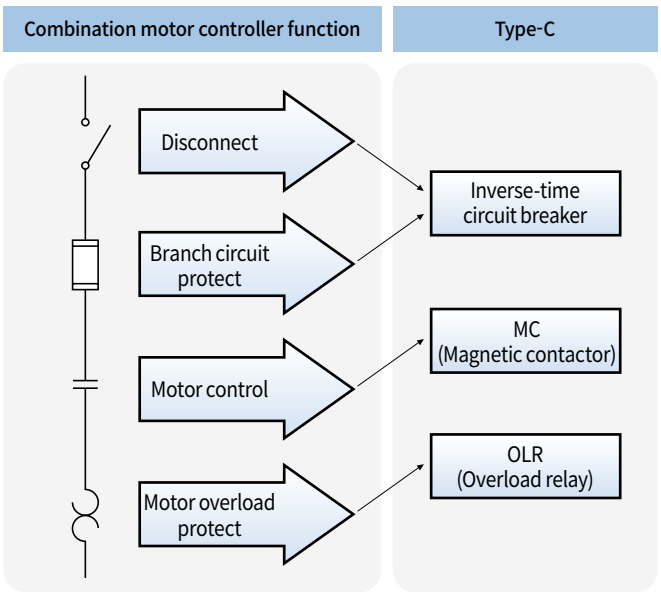

240V

Susol UL MCCB C-type

CB	MC	OLR	kA@240V	Maximum HP	Maximum NEC FLC [A]
UTE100E	MC-6a	MT-12 0.1~10A	50	3	9.6
UTE100N			65	3	
UTE100E	MC-9a	MT-12 0.1~10A	50	3	9.6
UTE100N			65	3	
UTE100E	MC-12a	MT-12 0.1~18A	50	5	15.2
UTE100N			65	5	
UTE100E	MC-18a	MT-12 0.1~18A	50	7.5	22
UTE100N			65	7.5	
UTS150N			65	7.5	
UTS150L			100	7.5	
UTE100E	MC-9b	MT-32 0.1~10A	50	3	9.6
UTE100N			65	3	
UTE100E	MC-12b	MT-32 0.1~18A	50	5	15.2
UTE100N			65	5	
UTE100E	MC-18b	MT-32 0.1~25A	50	7.5	22
UTE100N			65	7.5	
UTS150N			65	7.5	
UTS150L			100	7.5	

CB	MC	OLR	kA@240V	Maximum HP	Maximum NEC FLC [A]
UTE100E	MC-22b	MT-32 0.1~32A	50	10	28
UTE100N			65	10	
UTS150N			65	10	
UTS150L			100	10	
UTE100E	MC-32a	MT-32 0.1~32A	50	10	28
UTE100N			65	10	
UTS150N			65	10	
UTS150L			100	10	
UTE100E	MC-40a	MT-32 0.1~40A	50	15	42
UTE100N			65	15	
UTS150N			65	15	
UTS150L			100	15	

Rated UL 508 combination motor controller type-C

240V

Susol UL MCCB C-type

CB	MC	OLR	kA@240V	Maximum HP	Maximum NEC FLC [A]
UTE100E	MC-6a	MT-12 0.1~10A	50	3	9.6
UTE100N			65	3	
UTE100E	MC-9a	MT-12 0.1~10A	50	3	9.6
UTE100N			65	3	
UTE100E	MC-12a	MT-12 0.1~18A	50	5	15.2
UTE100N			65	5	
UTE100E	MC-18a	MT-12 0.1~18A	50	7.5	22
UTE100N			65	7.5	
UTS150N			65	7.5	
UTS150L			100	7.5	
UTE100E	MC-9b	MT-32 0.1~10A	50	3	9.6
UTE100N			65	3	
UTE100E	MC-12b	MT-32 0.1~18A	50	5	15.2
UTE100N			65	5	
UTE100E	MC-18b	MT-32 0.1~25A	50	7.5	22
UTE100N			65	7.5	
UTS150N			65	7.5	
UTS150L			100	7.5	
UTE100E	MC-22b	MT-32 0.1~32A	50	10	28
UTE100N			65	10	
UTS150N			65	10	
UTS150L			100	10	
UTE100E	MC-32a	MT-32 0.1~32A	50	10	28
UTE100N			65	10	
UTS150N			65	10	
UTS150L			100	10	
UTE100E	MC-40a	MT-32 0.1~40A	50	15	42
UTE100N			65	15	
UTS150N			65	15	
UTS150L			100	15	
UTE100E	MC-50a	MT-63 4~65A	50	25	65
UTE100N			65	25	
UTS150N			65	25	
UTS150L			100	25	

CB	MC	OLR	kA@240V	Maximum HP	Maximum NEC FLC [A]
UTE100E	MC-65a	MT-63 4~65A	50	30	80
UTE100N			65	30	
UTS150N			65	30	
UTS150L			100	30	
UTS150N	MC-75a	MT-95 7~95A	65	30	80
UTS150L			100	30	
UTS150N	MC-85a	MT-95 7~100A	65	40	104
UTS150L			100	40	
UTS150N	MC-100a	MT-95 7~100A	65	40	104
UTS150L			100	40	
UTS150N	MC-130a	MT-150 34~130A	65	40	104
UTS150L			100	40	
UTS150N	MC-150a	MT-150 34~130A	65	50	130
UTS150L			100	50	
UTS250N			65	50	
UTS250L			100	50	
UTS250N	MC-185a	MT-225 65~185A	65	60	154
UTS250L			100	60	
UTS400N			65	60	
UTS400L			100	60	
UTS400N	MC-225a	MT-225 65~240A	65	75	192
UTS400L			100	75	
UTS250N			65	75	
UTS250L			100	75	
UTS400N	MC-265a	MT-400 85~330A	65	100	248
UTS400L			100	100	
UTS400N	MC-330a	MT-400 85~330A	65	100	248
UTS400L			100	100	
UTS600N	MC-400a	MT-400 85~400A	65	150	360
UTS600L			100	150	
UTS800L	MC-500a	MT-800 200~600A	100	200	480
UTS800L	MC-630a	MT-800 200~800A	100	250	604

480V

Susol UL MCCB C-type

CB	MC	OLR	Voltage (V)	Short circuit rating (kA) (4)	Maximum HP	Maximum NEC FLC [A]
UTE100E	MC-6a	MT-12 0.1~10A	480	25	5	7.6
UTE100N			480	35	5	
UTE100E	MC-9a	MT-12 0.1~10A	480	25	5	7.6
UTE100N			480	35	5	
UTE100E	MC-12a	MT-12 0.1~13A	480	25	7.5	11
UTE100N			480	35	7.5	
UTE100E	MC-18a	MT-12 0.1~18A	480	25	10	14
UTE100N			480	35	10	
UTS150N			480	35	10	
UTS150H			480	65	10	
UTS150L			480	100	10	
UTE100E	MC-9b	MT-32 0.1~10A	480	25	5	7.6
UTE100N			480	35	5	
UTE100E	MC-12b	MT-32 0.1~13A	480	25	7.5	11
UTE100N			480	35	7.5	
UTE100E	MC-18b	MT-32 0.1~18A	480	25	10	14
UTE100N			480	35	10	
UTE100E	MC-22b	MT-32 0.1~25A	480	25	15	21
UTE100N			480	35	15	
UTS150N			480	35	15	
UTS150H			480	65	15	
UTS150L			480	100	15	
UTE100E	MC-32a	MT-32 0.1~32A	480	25	20	27
UTE100N			480	35	20	
UTS150N			480	35	20	
UTS150H			480	65	20	
UTS150L			480	100	20	
UTE100E	MC-40a	MT-32 0.1~40A	480	25	30	40
UTE100N			480	35	30	
UTS150N			480	35	30	
UTS150H			480	65	30	
UTS150L			480	100	30	
UTE100E	MC-50a	MT-63 4~65A	480	25	40	52
UTE100N			480	35	40	
UTS150N			480	35	40	
UTS150H			480	65	40	
UTS150L			480	100	40	
UTE100E	MC-65a	MT-63 4~65A	480	25	50	65
UTE100N			480	35	50	
UTS150N			480	35	50	
UTS150H			480	65	50	
UTS150L			480	100	50	

CB	MC	OLR	Voltage (V)	Short circuit rating (kA) (4)	Maximum HP	Maximum NEC FLC [A]
UTS150N	MC-75a	MT-95 7~75A	480	35	50	65
UTS150H			480	65	50	
UTS150L			480	100	50	
UTS150N	MC-85a	MT-95 7~85A	480	35	60	77
UTS150H			480	65	60	
UTS150L			480	100	60	
UTS150N	MC-100a	MT-95 7~100A	480	35	75	96
UTS150H			480	65	75	
UTS150L			480	100	75	
UTS150N	MC-130a	MT-150 34~130A	480	35	75	96
UTS150H			480	65	75	
UTS150L			480	100	75	
UTS150N	MC-150a	MT-150 34~130A	480	35	100	124
UTS150H			480	65	100	
UTS150L			480	100	100	
UTS250N			480	35	100	
UTS250H			480	65	100	
UTS250L			480	100	100	
UTS250N	MC-185a	MT-225 65~185A	480	35	125	156
UTS250H			480	65	125	
UTS250L			480	100	125	
UTS400N			480	35	150	
UTS400H			480	65	150	
UTS400L			480	100	150	
UTS250N	MC-225a	MT-225 65~240A	480	35	125	180
UTS250H			480	65	125	
UTS250L			480	100	125	
UTS400N			480	35	150	
UTS400H			480	65	150	
UTS400L			480	100	150	
UTS400N	MC-265a	MT-400 85~330A	480	35	200	240
UTS400H			480	65	200	
UTS400L			480	100	200	
UTS400N	MC-330a	MT-400 85~330A	480	35	200	302
UTS400H			480	65	200	
UTS400L			480	100	200	
UTS600N	MC-400a	MT-400 85~400A	480	35	300	361
UTS600H			480	65	300	
UTS600L			480	100	300	
UTS800H	MC-500a	MT-800 200~600A	480	65	400	477
UTS800L			480	100	400	
UTS800H	MC-630a	MT-800 200~800A	480	65	500	590
UTS800L	MC-630a		480	100	500	

Rated UL 508 combination motor controller type-C

600V

Susol UL MCCB C-type

CB	MC	OLR	Voltage (V)	Maximum HP	Maximum HP	Maximum NEC FLC [A]
UTE100E	MC-6a	MT-12 0.1~10A	600Y/347	14	7.5	9
UTE100N			600Y/347	18	7.5	
UTE100E	MC-9a	MT-12 0.1~10A	600Y/347	14	7.5	9
UTE100N			600Y/347	18	7.5	
UTE100E	MC-12a	MT-12 0.1~13A	600Y/347	14	10	11
UTE100N			600Y/347	18	10	
UTE100E	MC-18a	MT-12 0.1~18A	600Y/347	14	15	17
UTE100N			600Y/347	18	15	
UTS150N			600	18	15	
UTS150H			600	35	15	
UTS150L			600	50	15	
UTE100E	MC-9b	MT-32 0.1~10A	600Y/347	14	7.5	9
UTE100N			600Y/347	18	7.5	
UTE100E	MC-12b	MT-32 0.1~13A	600Y/347	14	10	11
UTE100N			600Y/347	18	10	
UTE100E	MC-18b	MT-32 0.1~18A	600Y/347	14	15	17
UTE100N			600Y/347	18	15	
UTE100E	MC-22b	MT-32 0.1~25A	600Y/347	14	20	22
UTE100N			600Y/347	18	20	
UTS150N			600	18	20	
UTS150H			600	35	20	
UTS150L			600	50	20	
UTE100E	MC-32a	MT-32 0.1~32A	600Y/347	14	25	27
UTE100N			600Y/347	18	25	
UTS150N			600	18	25	
UTS150H			600	35	25	
UTS150L			600	50	25	
UTE100E	MC-40a	MT-32 0.1~32A	600Y/347	14	30	32
UTE100N			600Y/347	18	30	
UTS150N			600	18	30	
UTS150H			600	35	30	
UTS150L			600	50	30	
UTE100E	MC-50a	MT-63 4~65A	600Y/347	14	50	52
UTE100N			600Y/347	18	50	
UTS150N			600	18	50	
UTS150H			600	35	50	
UTS150L			600	50	50	
UTE100E	MC-65a	MT-63 4~65A	600Y/347	14	60	62
UTE100N			600Y/347	18	60	
UTS150N			600	18	60	
UTS150H			600	35	60	
UTS150L			600	50	60	

CB	MC	OLR	Voltage (V)	Maximum HP	Maximum HP	Maximum NEC FLC [A]
UTS150N	MC-75a	MT-95 7~75A	600	18	60	62
UTS150H			600	35	60	
UTS150L			600	50	60	
UTS150N	MC-85a	MT-95 7~85A	600	18	75	77
UTS150H			600	35	75	
UTS150L			600	50	75	
UTS150N	MC-100a	MT-95 7~85A	600	18	75	77
UTS150H			600	35	75	
UTS150L			600	50	75	
UTS150N	MC-130a	MT-150 34~85A	600	18	75	77
UTS150H			600	35	75	
UTS150L			600	50	75	
UTS150N	MC-150a	MT-150 34~85A	600	18	75	77
UTS150H			600	35	75	
UTS150L			600	50	75	
UTS250N	MC-185a	MT-150 65~185A	600	18	125	125
UTS250H			600	35	125	
UTS250L			600	50	125	
UTS400N			600	18	150	
UTS400H			600	35	150	
UTS400L			600	50	150	
UTS250N	MC-225a	MT-225 65~185A	600	18	125	144
UTS250H			600	35	125	
UTS250L			600	50	125	
UTS400N			600	18	150	
UTS400H			600	35	150	
UTS400L			600	50	150	
UTS400N	MC-265a	MT-400 85~240A	600	18	200	192
UTS400H			600	35	200	
UTS400L			600	50	200	
UTS400N	MC-330a	MT-400 85~330A	600	18	200	242
UTS400H			600	35	200	
UTS400L			600	50	200	
UTS600N	MC-400a	MT-400 85~400A	600	18	300	289
UTS600H			600	35	300	
UTS600L			600	50	300	
UTS800H	MC-500a	MT-800 200~400A	600	35	400	382
UTS800L			600	50	400	
UTS800H	MC-630a	MT-800 200~600A	600	35	500	472
UTS800L			600	50	500	

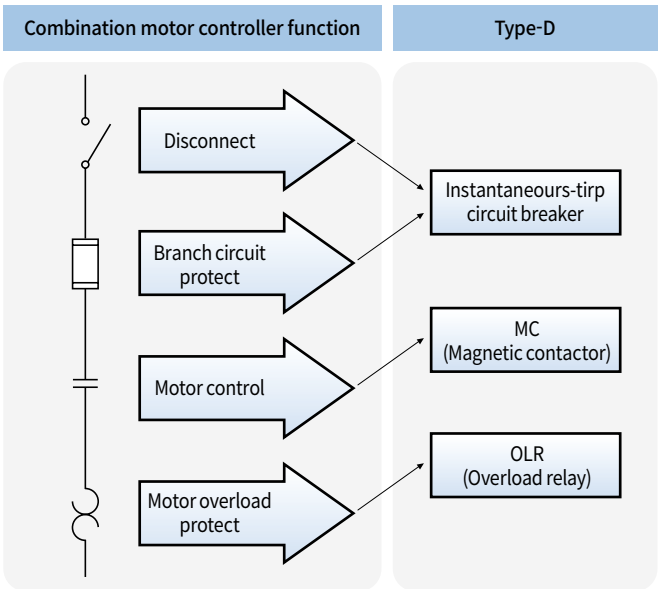

240V

Susol UL MCCB D-type

CB	MC	OLR	kA@240V	Maximum HP	Maximum NEC FLC [A]
UTS150L MCP	MC-6a	MT-12 0.1~10A	100	3	9.6
UTS150L MCP	MC-9a	MT-12 0.1~10A	100	3	9.6
UTS150L MCP	MC-12a	MT-12 0.1~18A	100	5	15.2
UTS150L MCP	MC-18a	MT-12 0.1~18A	100	7.5	22
UTS150L MCP	MC-9b	MT-32 0.1~10A	100	3	9.6
UTS150L MCP	MC-12b	MT-32 0.1~18A	100	5	15.2
UTS150L MCP	MC-18b	MT-32 0.1~25A	100	7.5	22
UTS150L MCP	MC-22b	MT-32 0.1~32A	100	10	28
UTS150L MCP	MC-32a	MT-32 0.1~32A	100	10	28
UTS150L MCP	MC-40a	MT-32 0.1~40A	100	15	42
UTS150L MCP	MC-50a	MT-63 4~65A	100	25	65
UTS150L MCP	MC-65a	MT-63 4~65A	100	30	80
UTS150L MCP	MC-75a	MT-95 7~95A	100	30	80

CB	MC	OLR	kA@240V	Maximum HP	Maximum NEC FLC [A]
UTS150L MCP	MC-85a	MT-95 7~100A	100	40	104
UTS150L MCP	MC-100a	MT-95 7~100A	100	40	104
UTS150L MCP	MC-130a	MT-150 34~130A	100	40	104
UTS250L MCP	MC-150a	MT-150 34~130A	100	50	130
UTS250L MCP	MC-185a	MT-225 65~160A	100	60	154
UTS400L MCP	MC-185a	MT-225 65~185A	100	60	154
UTS250L MCP	MC-225a	MT-225 65~240A	100	75	192
UTS400L MCP	MC-225a	MT-225 65~240A	100	75	192
UTS400L MCP	MC-265a	MT-400 85~330A	100	100	248
UTS400L MCP	MC-330a	MT-400 85~330A	100	100	248
UTS600L MCP	MC-400a	MT-400 85~400A	100	150	360
UTS800L MCP	MC-500a	MT-800 200~600A	100	200	480
UTS800L MCP	MC-630a	MT-800 200~800A	100	250	604

Rated UL 508 combination motor controller type-D

480V

Susol UL MCCB D-type

CB	MC	OLR	kA@400V	Maximum HP	Maximum NEC FLC [A]
UTS150L MCP	MC-6a	MT-12 0.1~10A	65	5	7.6
UTS150L MCP	MC-9a	MT-12 0.1~10A	65	5	7.6
UTS150L MCP	MC-12a	MT-12 0.1~13A	65	7.5	11
UTS150L MCP	MC-18a	MT-12 0.1~18A	65	10	14
UTS150L MCP	MC-9b	MT-32 0.1~10A	65	5	7.6
UTS150L MCP	MC-12b	MT-32 0.1~13A	65	7.5	11
UTS150L MCP	MC-18b	MT-32 0.1~18A	65	10	14
UTS150L MCP	MC-22b	MT-32 0.1~25A	65	15	21
UTS150L MCP	MC-32a	MT-32 0.1~32A	65	20	27
UTS150L MCP	MC-40a	MT-32 0.1~40A	65	20	40
UTS150H MCP	MC-50a	MT-63 4~65A	65	40	52
UTS150L MCP	MC-50a	MT-63 4~65A	100	40	52
UTS150H MCP	MC-65a	MT-63 4~65A	65	50	65
UTS150L MCP	MC-65a	MT-63 4~65A	100	50	65
UTS150H MCP	MC-75a	MT-95 7~75A	65	50	65
UTS150L MCP	MC-75a	MT-95 7~75A	100	50	65
UTS150H MCP	MC-85a	MT-95 7~85A	65	60	77
UTS150L MCP	MC-85a	MT-95 7~85A	100	60	77
UTS150H MCP	MC-100a	MT-95 7~100A	65	75	96
UTS150L MCP	MC-100a	MT-95 7~100A	100	75	96

CB	MC	OLR	kA@400V	Maximum HP	Maximum NEC FLC [A]
UTS150H MCP	MC-130a	MT-150 34~130A	65	75	96
UTS150L MCP	MC-130a	MT-150 34~130A	100	75	96
UTS250H MCP	MC-150a	MT-150 34~130A	65	100	124
UTS250L MCP	MC-150a	MT-150 34~130A	100	100	124
UTS250H MCP	MC-185a	MT-225 65~185A	65	125	156
UTS250L MCP	MC-185a	MT-225 65~185A	85	125	156
UTS400H MCP	MC-185a	MT-225 65~185A	65	125	156
UTS400L MCP	MC-185a	MT-225 65~185A	100	125	156
UTS250H MCP	MC-225a	MT-225 65~240A	65	150	180
UTS250L MCP	MC-225a	MT-225 65~240A	85	150	180
UTS400H MCP	MC-225a	MT-225 65~240A	65	150	180
UTS400L MCP	MC-225a	MT-225 65~240A	100	150	180
UTS400H MCP	MC-265a	MT-400 85~330A	65	200	240
UTS400L MCP	MC-265a	MT-400 85~330A	100	200	240
UTS400H MCP	MC-330a	MT-400 85~330A	65	200	240
UTS400L MCP	MC-330a	MT-400 85~330A	100	200	240
UTS600H MCP	MC-400a	MT-400 85~400A	65	300	361
UTS600L MCP	MC-400a	MT-400 85~400A	100	300	361
UTS800L MCP	MC-500a	MT-800 200~600A	100	400	477
UTS800L MCP	MC-630a	MT-800 200~800A	100	500	590

600V

Susol UL MCCB D-type

CB	MC	OLR	kA@600V	Maximum HP	Maximum NEC FLC [A]
UTS150L MCP	MC-6a	MT-12 0.1~10A	25	7.5	9
UTS150L MCP	MC-9a	MT-12 0.1~10A	25	7.5	9
UTS150L MCP	MC-12a	MT-12 0.1~13A	25	10	11
UTS150L MCP	MC-18a	MT-12 0.1~18A	25	15	17
UTS150L MCP	MC-9b	MT-32 0.1~10A	25	7.5	9
UTS150L MCP	MC-12b	MT-32 0.1~13A	25	10	11
UTS150L MCP	MC-18b	MT-32 0.1~18A	25	15	17
UTS150L MCP	MC-22b	MT-32 0.1~25A	25	20	22
UTS150L MCP	MC-32a	MT-32 0.1~32A	25	25	27
UTS150L MCP	MC-40a	MT-32 0.1~32A	25	25	32
UTS150H MCP	MC-50a	MT-63 4~65A	25	50	52
UTS150L MCP	MC-50a	MT-63 4~65A	50	50	62
UTS150H MCP	MC-65a	MT-63 4~65A	25	60	62
UTS150L MCP	MC-65a	MT-63 4~65A	50	60	62
UTS150H MCP	MC-75a	MT-95 7~75A	25	60	77
UTS150L MCP	MC-75a	MT-95 7~75A	50	60	77
UTS150H MCP	MC-85a	MT-95 7~85A	25	75	77
UTS150L MCP	MC-85a	MT-95 7~85A	50	75	77
UTS150H MCP	MC-100a	MT-95 7~85A	25	75	77
UTS150L MCP	MC-100a	MT-95 7~85A	50	75	77

CB	MC	OLR	kA@600V	Maximum HP	Maximum NEC FLC [A]
UTS150H MCP	MC-130a	MT-150 65~185A	25	75	77
UTS150L MCP	MC-130a	MT-150 65~185A	50	75	77
UTS150H MCP	MC-150a	MT-150 65~185A	25	75	77
UTS150L MCP	MC-150a	MT-150 65~185A	50	75	77
UTS250H MCP	MC-185a	MT-225 65~185A	25	125	125
UTS250L MCP	MC-185a	MT-225 65~185A	50	125	125
UTS400H MCP	MC-185a	MT-225 65~185A	25	125	125
UTS400L MCP	MC-185a	MT-225 65~185A	50	125	125
UTS250H MCP	MC-225a	MT-225 65~185A	25	150	144
UTS250L MCP	MC-225a	MT-225 65~185A	50	150	144
UTS400H MCP	MC-225a	MT-225 65~185A	25	150	144
UTS400L MCP	MC-225a	MT-225 65~185A	50	150	144
UTS400H MCP	MC-265a	MT-400 85~240A	25	200	192
UTS400L MCP	MC-265a	MT-400 85~240A	50	200	192
UTS400H MCP	MC-330a	MT-400 85~330A	25	200	242
UTS400L MCP	MC-330a	MT-400 85~330A	50	200	242
UTS600H MCP	MC-400a	MT-400 85~400A	25	300	289
UTS600L MCP	MC-400a	MT-400 85~400A	50	300	289
UTS800L MCP	MC-500a	MT-800 200~400A	50	400	382
UTS800L MCP	MC-630a	MT-800 200~600A	50	500	472

Rated UL 508 combination motor controller type-F

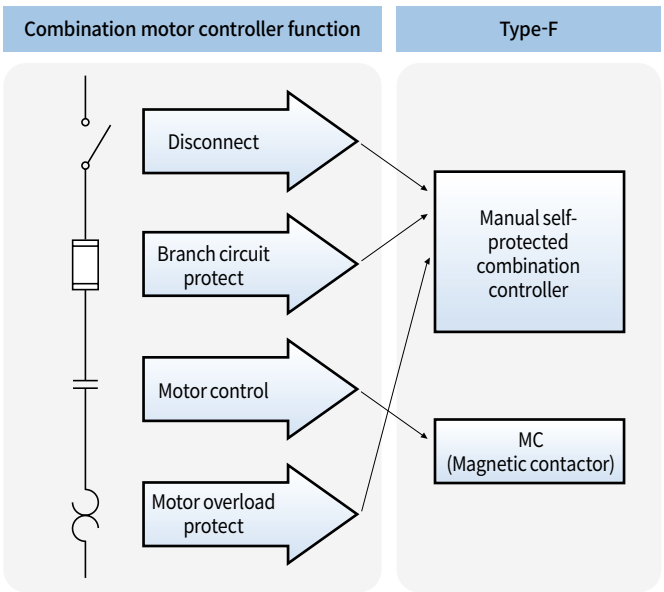

32AF rotary operation, High interruption

Manual self-Protected	Adjustment range (A)	Short circuit rating (kA)			MC (Applied contactor)	
		240V	480Y/277V	600Y/347V	Susol	Metasol
MMS-32H-0.16	0.1~0.16	100	65	25	MC-9	MC-6a/MC-9a/MC-9b
MMS-32H-0.25	0.16~0.25	100	65	25	MC-9	MC-6a/MC-9a/MC-9b
MMS-32H-0.4	0.25~0.4	100	65	25	MC-9	MC-6a/MC-9a/MC-9b
MMS-32H-0.63	0.4~0.63	100	65	25	MC-9	MC-6a/MC-9a/MC-9b
MMS-32H-1	0.63~1	100	65	25	MC-9	MC-6a/MC-9a/MC-9b
MMS-32H-1.6	1~1.6	100	65	25	MC-9	MC-6a/MC-9a/MC-9b
MMS-32H-2.5	1.6~2.5	100	65	25	MC-12	MC-12a/MC-12b
MMS-32H-4	2.5~4	100	65	25	MC-12	MC-12a/MC-12b
MMS-32H-6	4~6	100	65	25	MC-18	MC-18a/MC-18b
MMS-32H-8	5~8	100	65	10	MC-18	MC-18a/MC-18b
MMS-32H-10	6~10	100	65	10	MC-18	MC-18a/MC-18b
MMS-32H-13	9~13	100	65	10	MC-25	MC-22b/MC-25a
MMS-32H-17	11~17	100	30	10	MC-25	MC-22b/MC-25a
MMS-32H-22	14~22	100	30	10	MC-25	MC-22b/MC-25a
MMS-32H-26	18~26	100	30	10	MC-32	MC-32a
MMS-32H-32	22~32	100	30	10	MC-32	MC-32a
MMS-32H-40	28~40	100	30	10	-	MC-35a/MC-40a

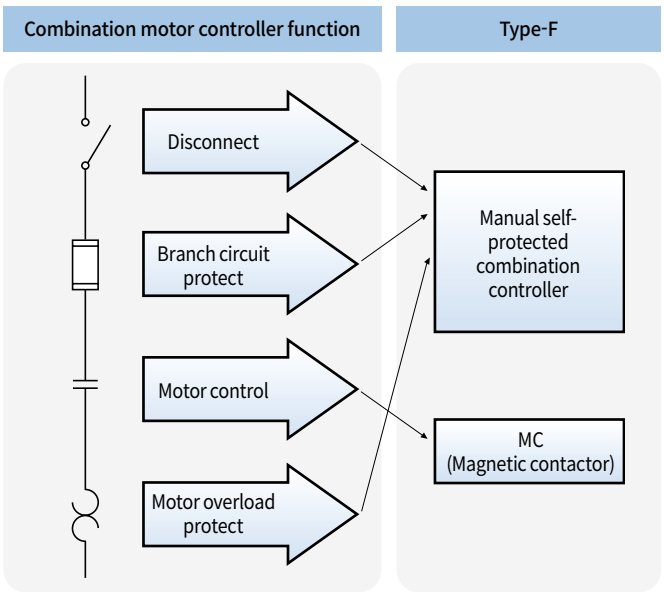

63AF rotary operation, Standard interruption

Manual self-Protected	Adjustment range (A)	Short circuit rating (kA)			MC (Applied contactor)	
		240V	480Y/277V	600Y/347V	Susol	Metasol
MMS-63S-10	6~10	100	50	10	MC-35	MC-50a
MMS-63S-13	9~13	100	50	10	MC-35	MC-50a
MMS-63S-17	11~17	100	40	10	MC-35	MC-50a
MMS-63S-22	14~22	100	40	10	MC-35	MC-50a
MMS-63S-26	18~26	100	40	10	MC-35	MC-50a
MMS-63S-32	22~32	100	40	10	MC-35	MC-50a
MMS-63S-40	28~40	100	40	10	MC-40	MC-50a
MMS-63S-50	34~50	100	40	10	MC-50	MC-50a
MMS-63S-63	45~63	100	40	10	MC-63	MC-65a
MMS-63S-65	47~65	100	40	10	-	MC-65a

63AF rotary operation, High interruption

Manual self-Protected	Adjustment range (A)	Short circuit rating (kA)			MC (Applied contactor)	
		240V	480Y/277V	600Y/347V	Susol	Metasol
MMS-63H-10	6~10	100	65	25	MC-35	MC-50a
MMS-63H-13	9~13	100	65	25	MC-35	MC-50a
MMS-63H-17	11~17	100	50	10	MC-35	MC-50a
MMS-63H-22	14~22	100	50	10	MC-35	MC-50a
MMS-63H-26	18~26	100	50	10	MC-35	MC-50a
MMS-63H-32	22~32	100	50	10	MC-35	MC-50a
MMS-63H-40	28~40	100	50	10	MC-40	MC-50a
MMS-63H-50	34~50	100	50	10	MC-50	MC-50a
MMS-63H-63	45~63	100	50	10	MC-63	MC-65a
MMS-63H-65	47~65	100	40	10	-	MC-65a

Rated UL 508 combination motor controller type-F

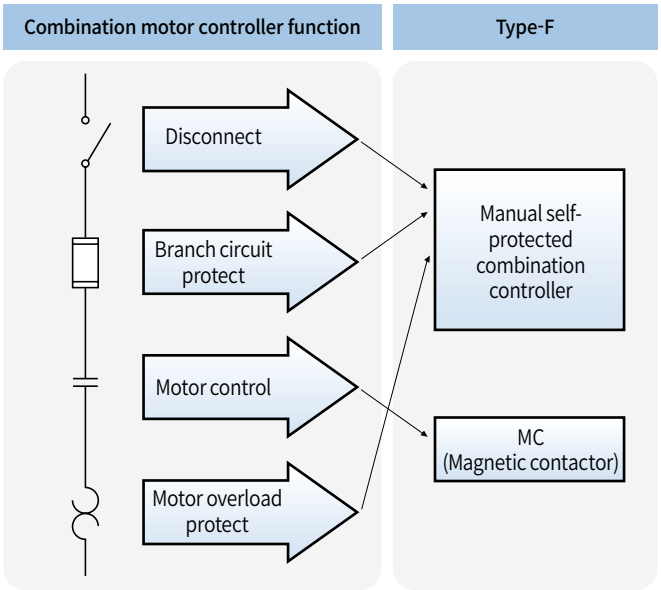

100AF rotary operation, Standard interruption

Manual self-Protected	Adjustment range (A)	Short circuit rating (kA)			MC (Applied contactor)	
		240V	480Y/277V	600Y/347V	Susol	Metasol
MMS-100S-17	11~17	100	50	10	MC-65	MC-75a
MMS-100S-22	14~22	100	50	10	MC-65	MC-75a
MMS-100S-26	18~26	100	50	10	MC-65	MC-75a
MMS-100S-32	22~32	100	50	10	MC-65	MC-75a
MMS-100S-40	28~40	100	50	10	MC-65	MC-75a
MMS-100S-50	34~50	100	50	10	MC-65	MC-75a
MMS-100S-63	45~63	100	40	10	MC-65	MC-75a
MMS-100S-75	55~75	100	40	10	MC-75	MC-75a
MMS-100S-90	70~90	100	40	10	MC-85	MC-85a
MMS-100S-100	80~100	100	40	10	MC-95	MC-100a

100AF rotary operation, High interruption

Manual self-Protected	Adjustment range (A)	Short circuit rating (kA)			MC (Applied contactor)	
		240V	480Y/277V	600Y/347V	Susol	Metasol
MMS-100H-17	11~17	100	65	25	MC-65	MC-75a
MMS-100H-22	14~22	100	65	20	MC-65	MC-75a
MMS-100H-26	18~26	100	65	20	MC-65	MC-75a
MMS-100H-32	22~32	100	65	20	MC-65	MC-75a
MMS-100H-40	28~40	100	65	20	MC-65	MC-75a
MMS-100H-50	34~50	100	65	20	MC-65	MC-75a
MMS-100H-63	45~63	100	50	10	MC-65	MC-75a
MMS-100H-75	55~75	100	50	10	MC-75	MC-75a
MMS-100H-90	70~90	100	50	10	MC-85	MC-85a
MMS-100H-100	80~100	100	50	10	MC-95	MC-100a

LS contactor ready for IE3-rated motors

What is IE3?

Motors rated from IE1 to IE4 varies in energy efficiency. IE3 is more efficient compared to IE1 and IE2-rated motors. IE3-rated motors also have lower rated current, as well as higher starting current and inrush current.

Why IE3?

As part of the EU Enviromental policy "20/30-20-20" strategy, the EU is committed to achieve the following by 2020:

- Reduce greenhouse gas emissions up to 30 %
- Increase renewable energy share to 20 %
- Boost energy efficiency by 20%

IEC 60034-30 standard specifies IE classes for motors in accordance with the above requirements.
IEC 60034-30-1 standard classifications:

- IE1 Standard Efficiency
- IE2 High Efficiency
- IE3 Premium Efficiency
- IE4 Super Premium Efficiency

IE3 motors can be associated with standard starter solutions, including contactor, manual motor starter. When an IE3 motor starts, inrush and starting current increases more rapidly compared to an IE2 motor. The increased inrush and starting currents can affect the selection of the electrical device.
To secure the highest efficiency in your electrical system, it is strongly recommended to use the more efficient IE3 class product. LS Electric contactors are compliant with the IE3 standard.

Dimension

3-pole contactors 18AF/22AF

[mm]

MC-6a~18a AC
1NO or 1NC

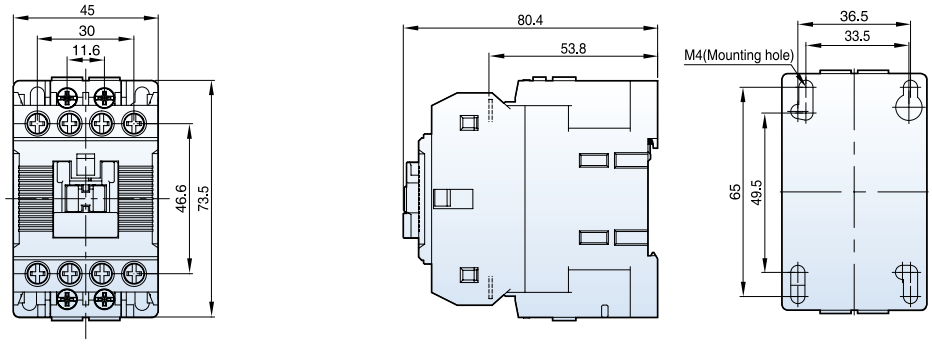

0.3kg

MC-6a~18a DC
1NO or 1NC

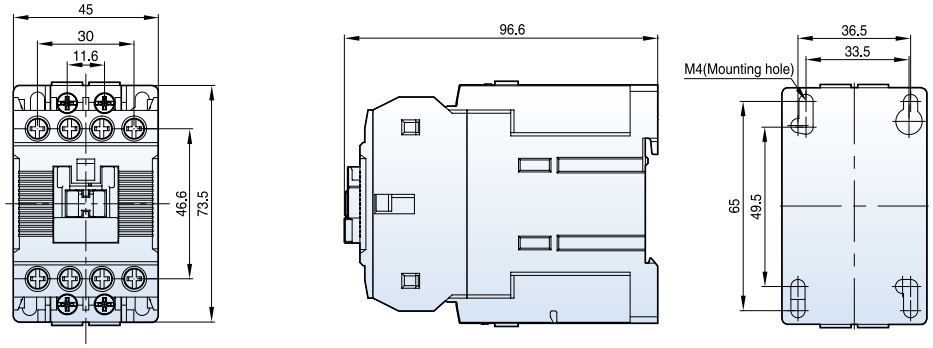

0.4kg

MC-9b~22b AC
1NO1NC

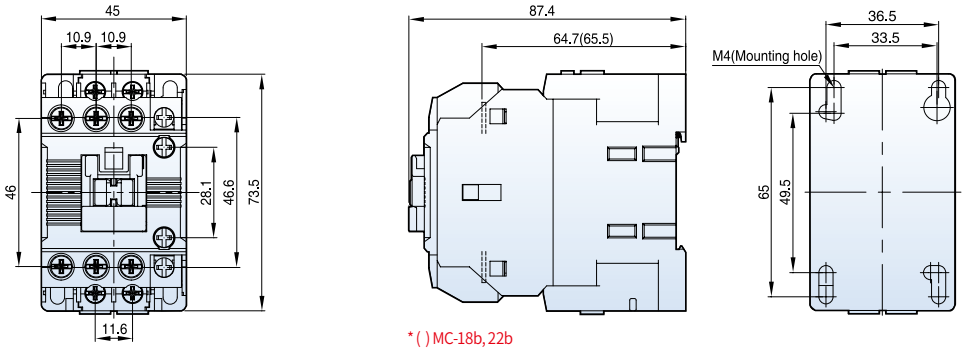

* ( ) MC-18b, 22b

0.3kg

MC-9b~22b DC
1NO1NC

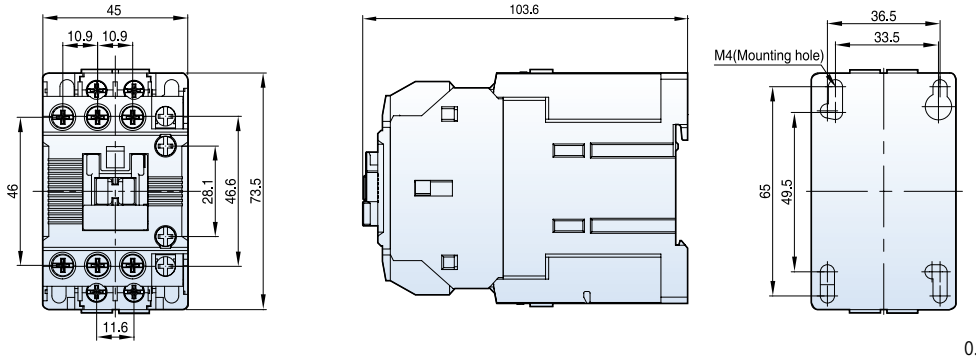

0.41kg

3-pole contactors 40AF

[mm]

MC-32a~40a AC

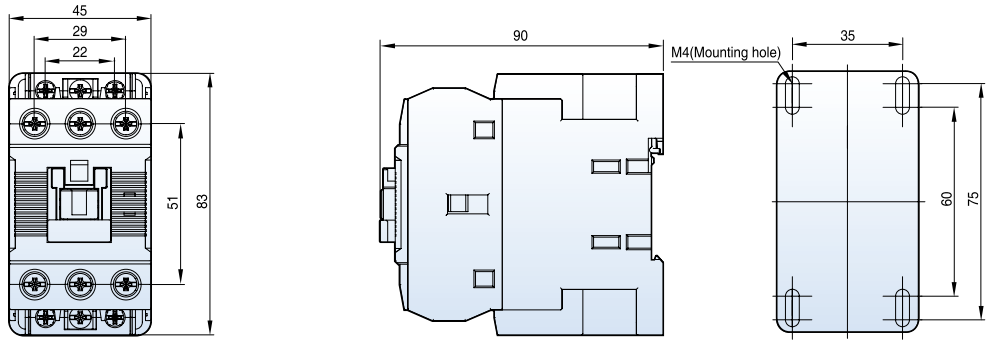

0.4kg

MC-32a~40a DC

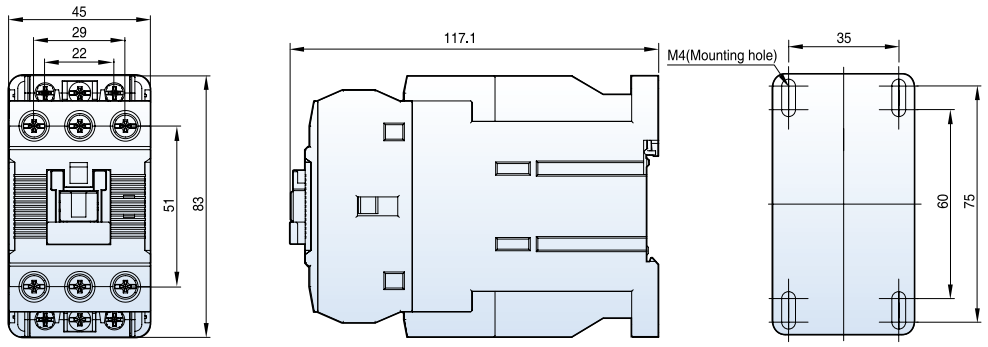

0.6kg

MC-32a~40a AC
2NO2NC

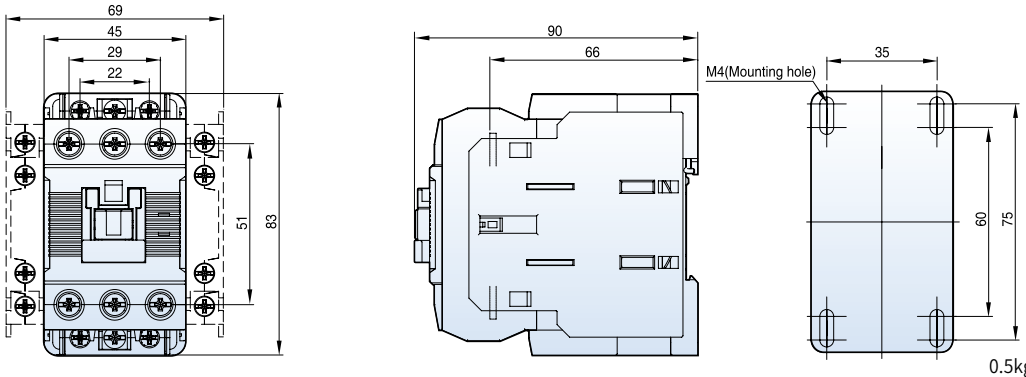

0.5kg

MC-32a~40a DC
2NO2NC

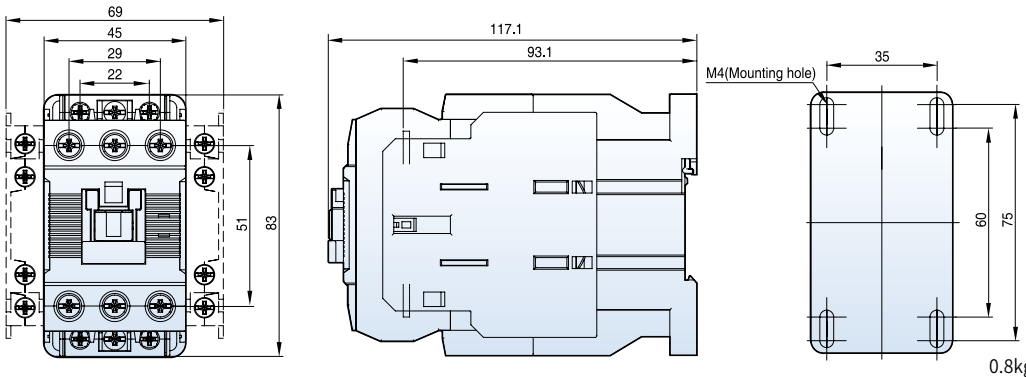

0.8kg

3-pole contactors 65AF

[mm]

MC-50a~65a AC

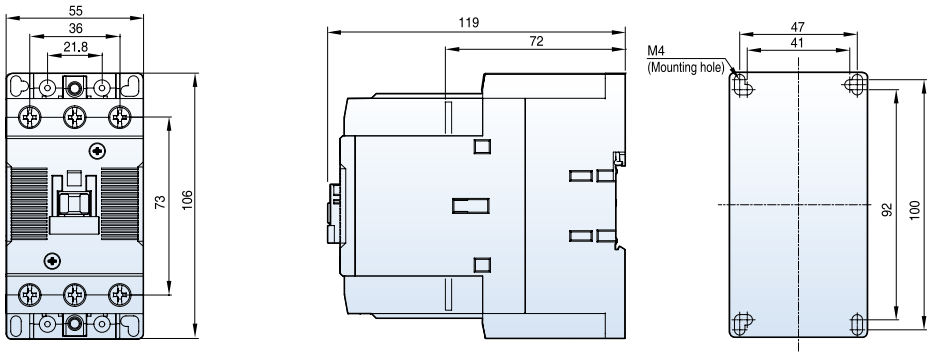

0.9kg

MC-50a~65a DC

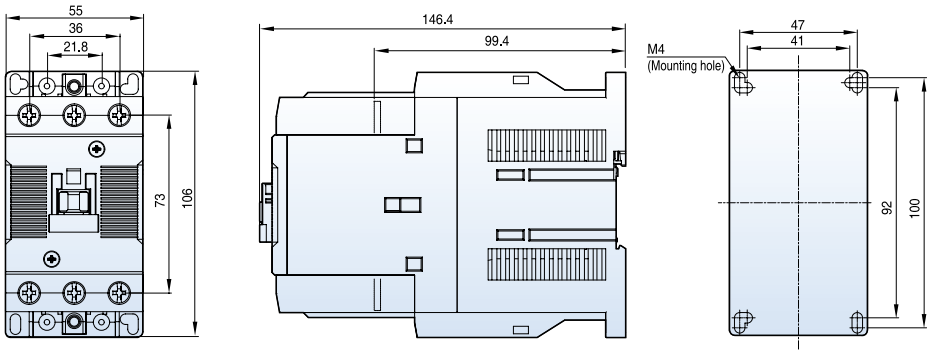

1.2kg

MC-50a~65a AC
2NO2NC

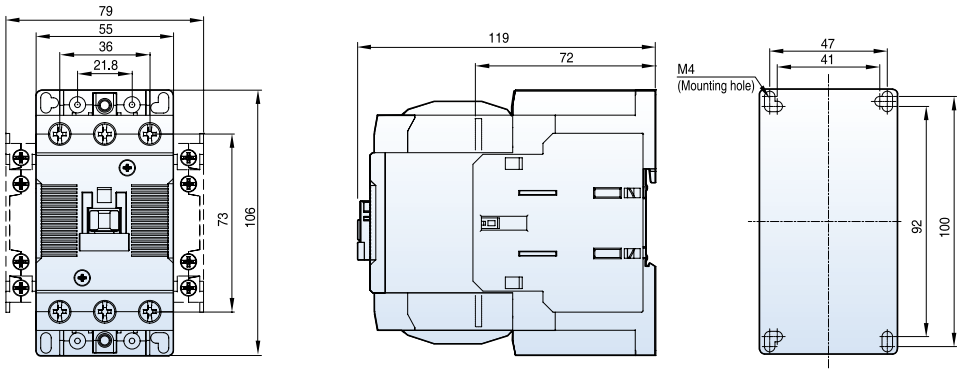

1kg

MC-50a~65a DC
2NO2NC

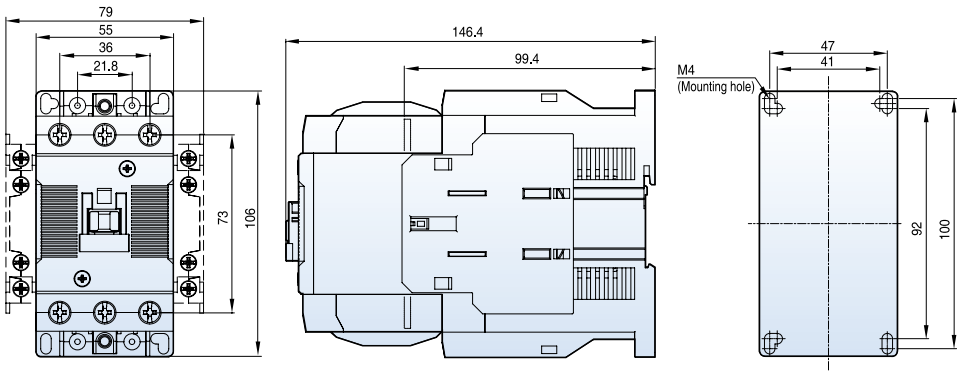

1.3kg

3-pole contactors 100AF

[mm]

MC-75a~100a AC

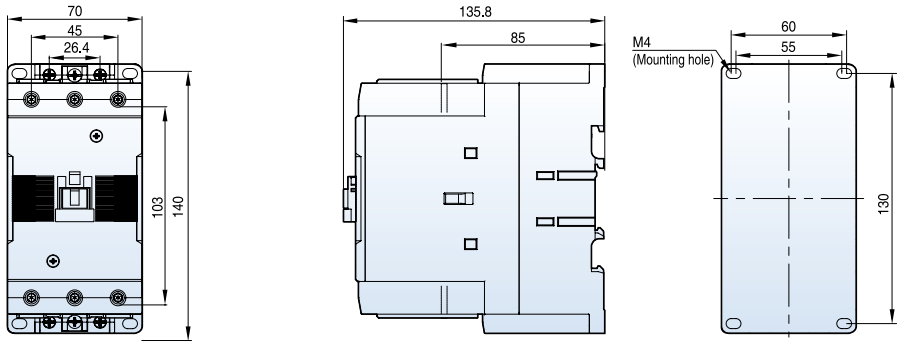

1.8kg

MC-75a~100a DC

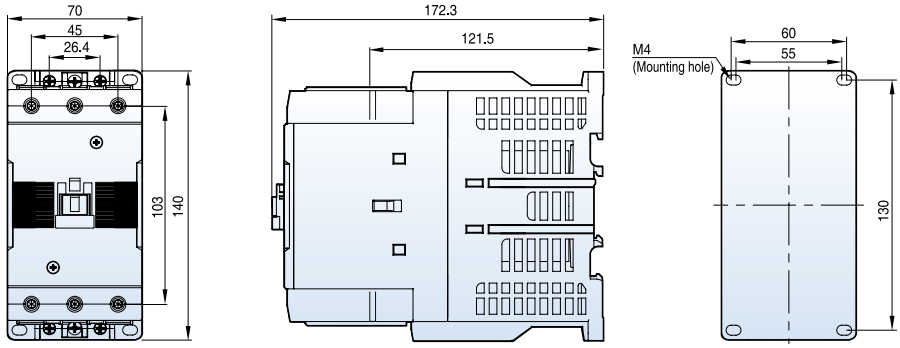

2.7kg

MC-75a~100a AC

2NO2NC

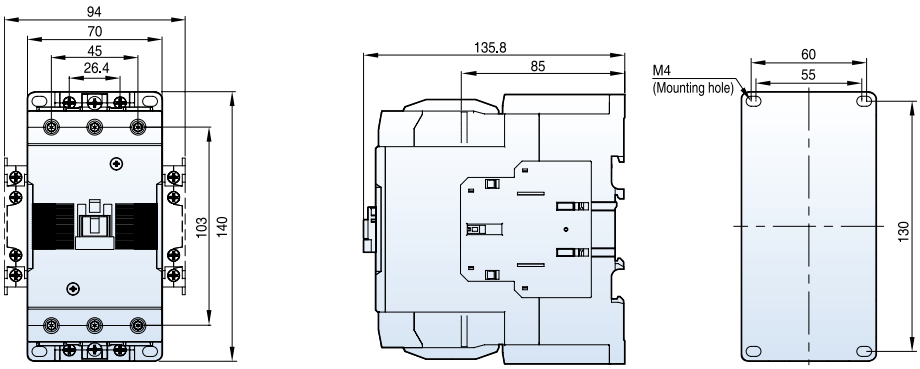

1.9kg

MC-75a~100a DC

2NO2NC

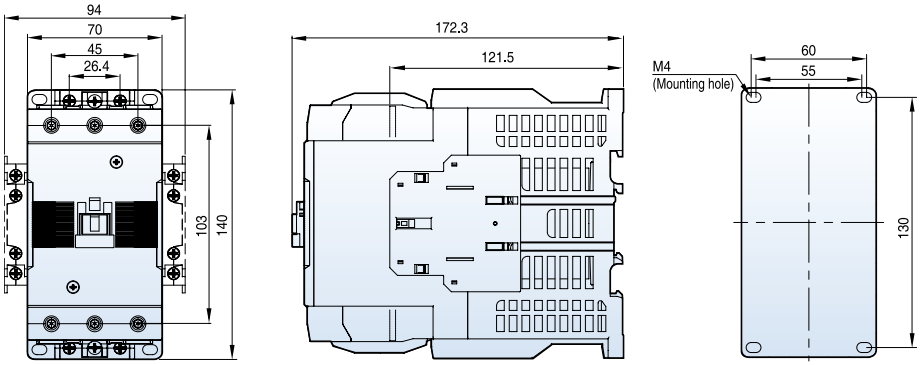

2.8kg

3-pole contactors 150AF~400AF

[mm]

MC-130a
MC-150a

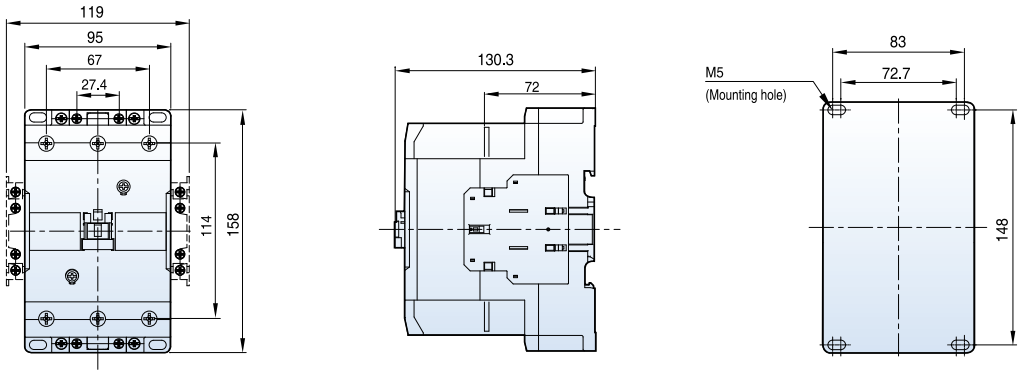

2.4kg

MC-185a
MC-225a

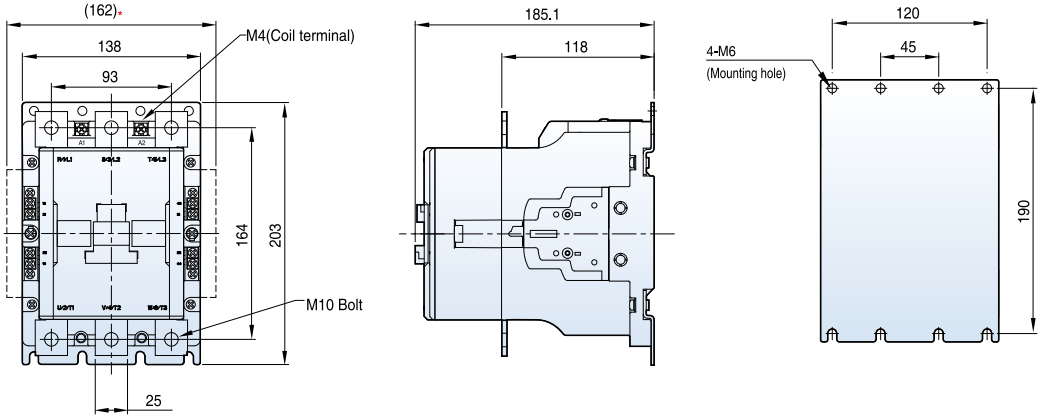

5.4kg

MC-265a
MC-330a
MC-400a

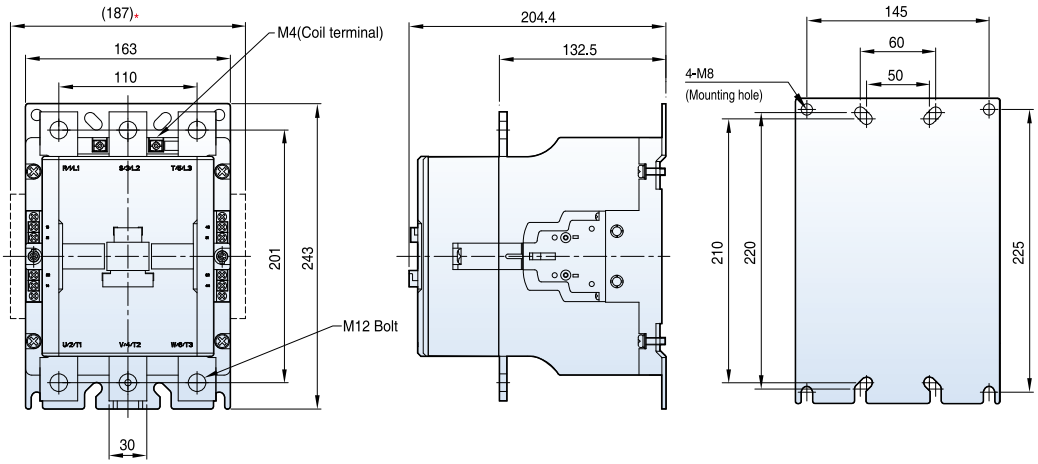

* Optional auxiliary contact unit (side mount type)

9.2kg

3-pole contactors 800AF~2650AF

[mm]

MC-500a
MC-630a
MC-800a
MCi-900
MCi-1050

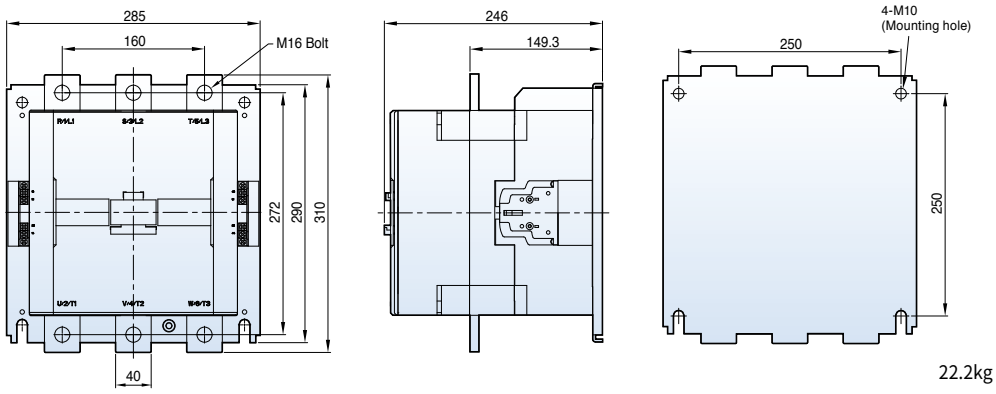

22.2kg

MC-1260a
MCi-1260

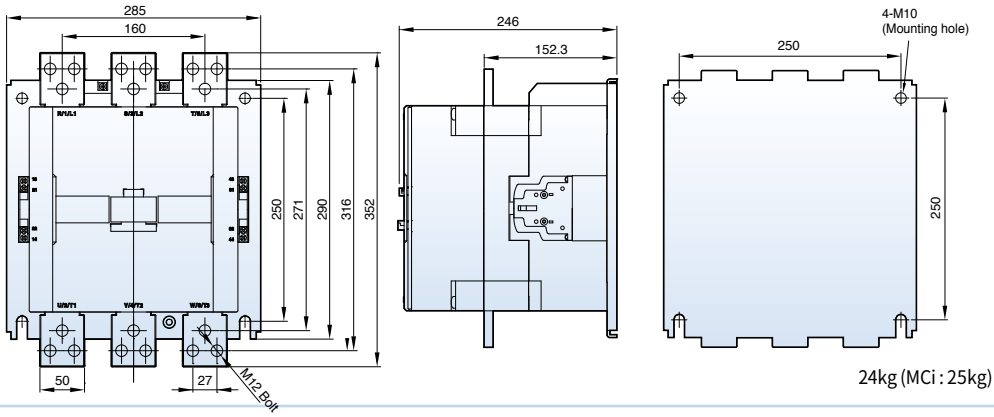

24kg (MCi : 25kg)

MC-1400a
MC-1700a
MC-2100a
MCi-1700
MCi-2100

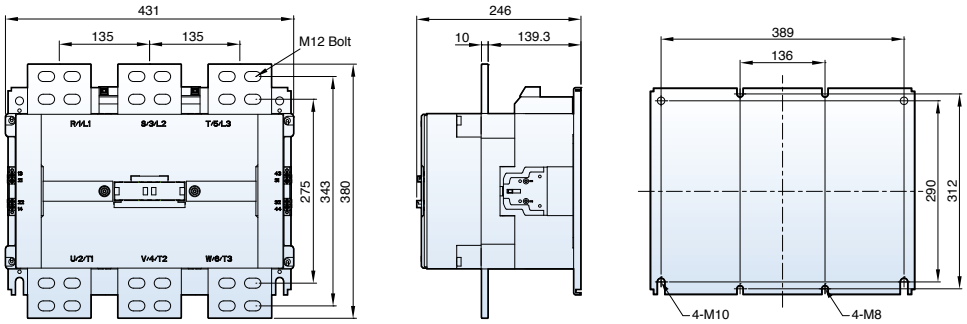

33.8kg (MCi : 34.6kg)

MC-2650a
MCi-2650

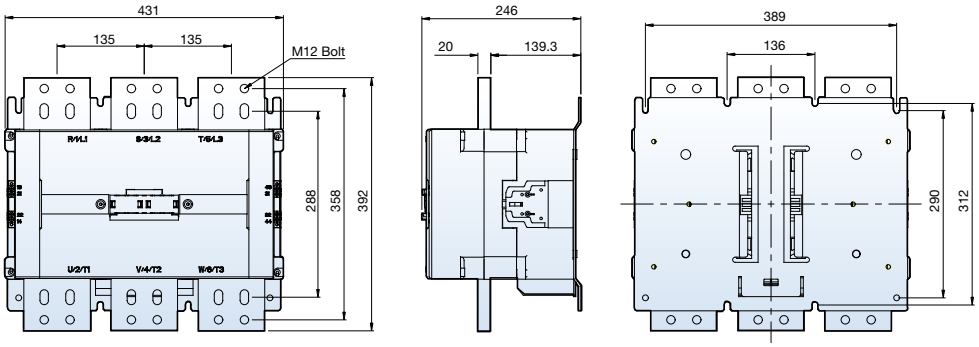

47kg

Motor starters 18AF~40AF

[mm]

MS-6a~18a

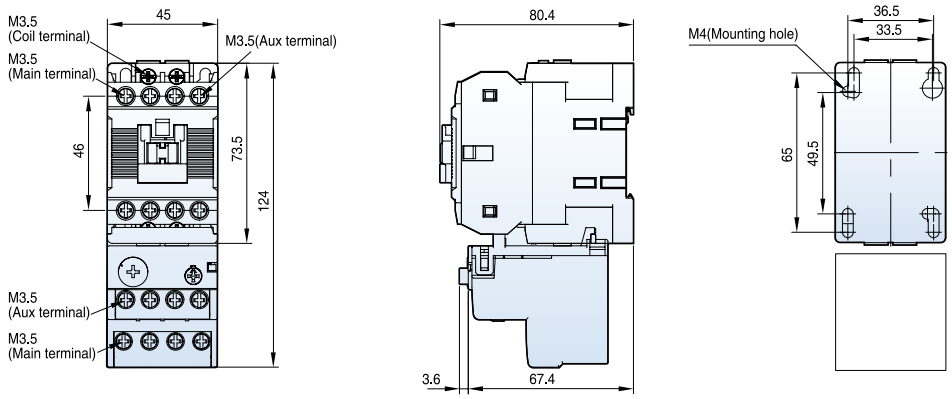

0.5kg

MS-9b~22b

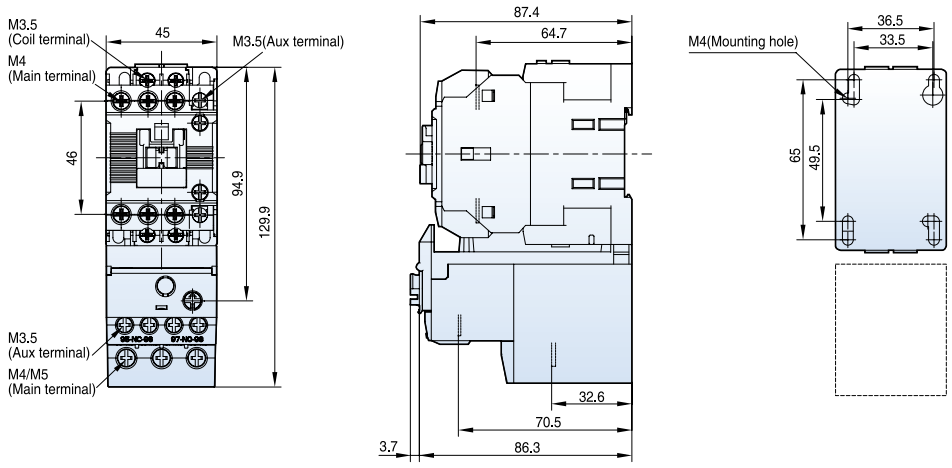

0.5kg

MS-32a~40a

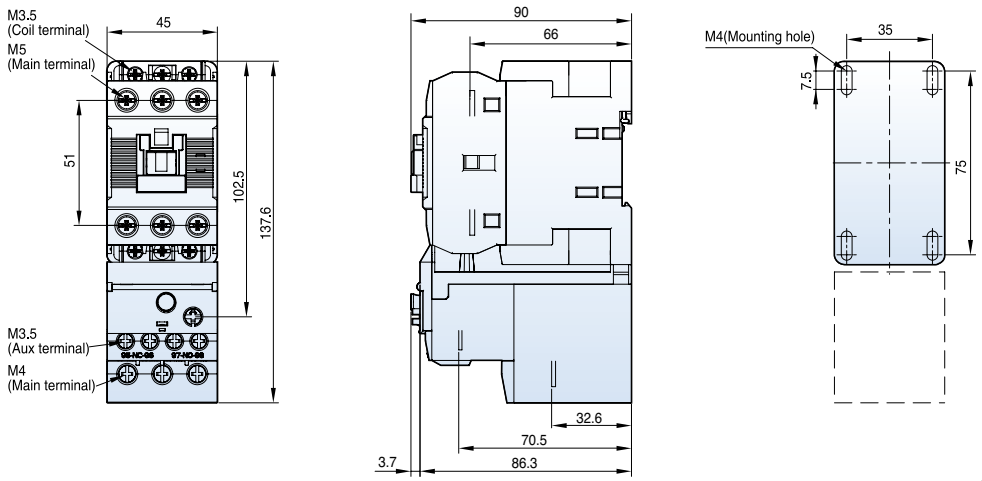

0.6kg

Motor starters 65AF~150AF

[mm]

MS-50a~65a

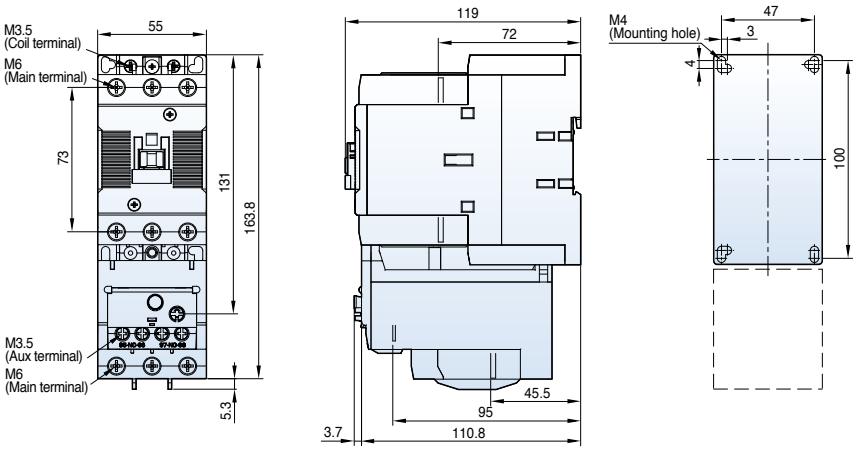

1.3kg

MS-75a~100a

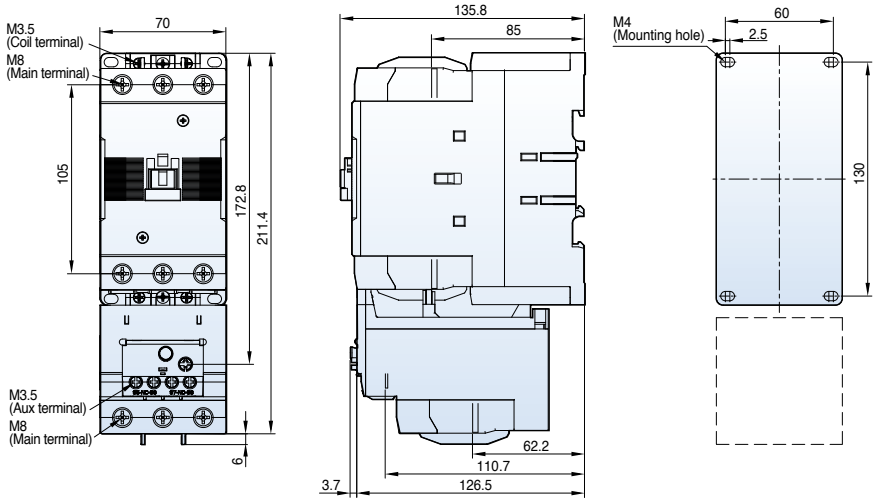

2.3kg

MS-130a

MS-150a

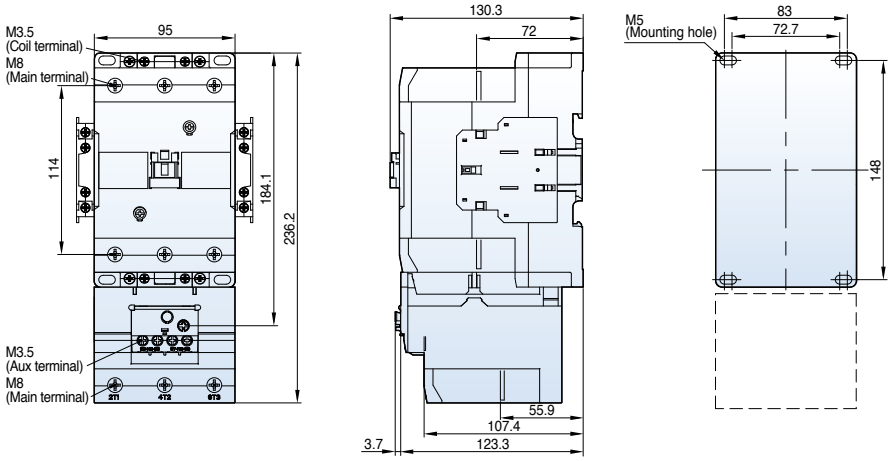

2.9kg

Motor starters 185AF~800AF

[mm]

MS-185a
MS-225a

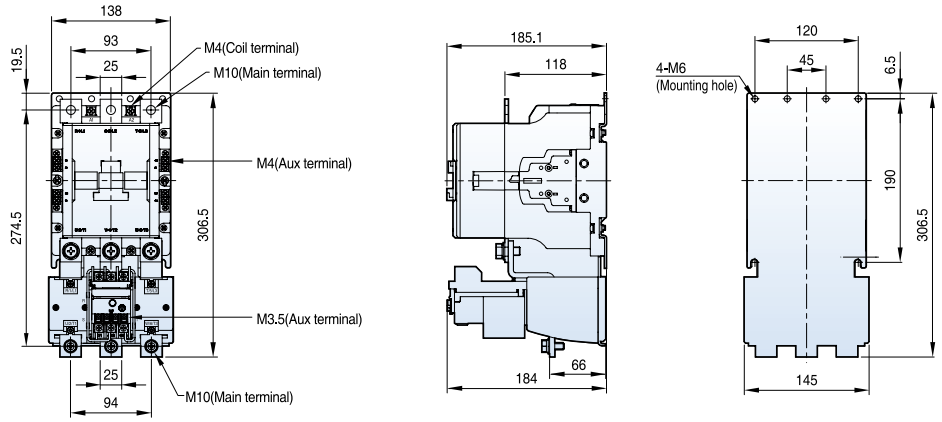

7.9kg

MS-265a
MS-330a
MS-400a

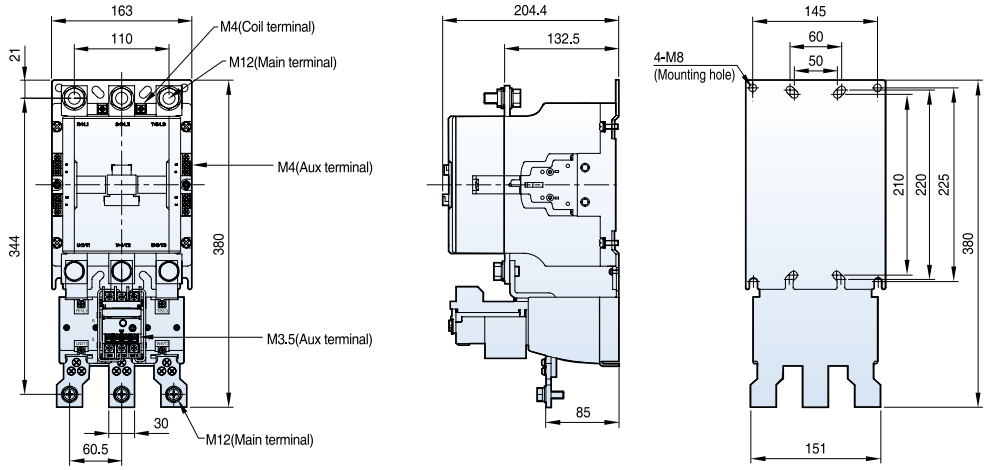

11.8kg

MS-500a
MS-630a
MS-800a

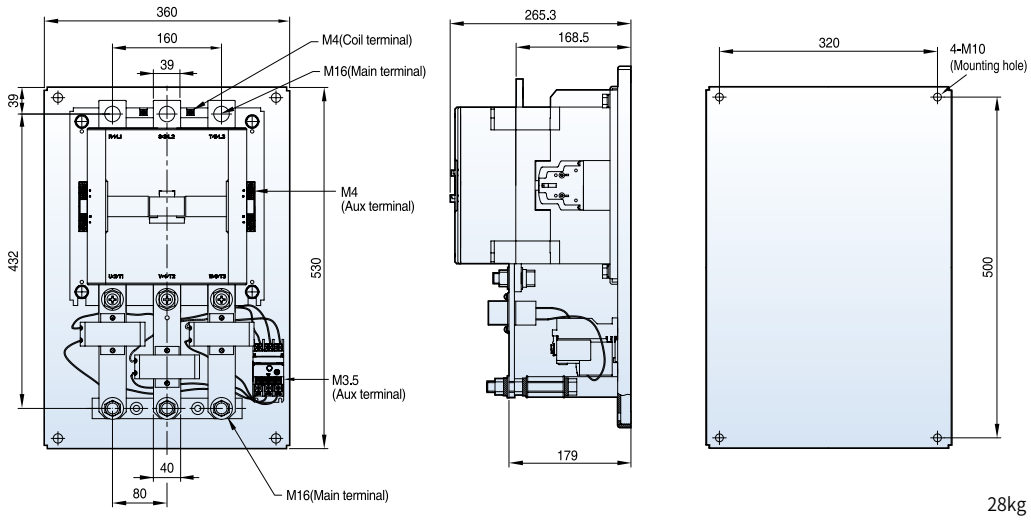

28kg

Reversing contactors and starters 18AF

[mm]

MC-6aR~18aR AC

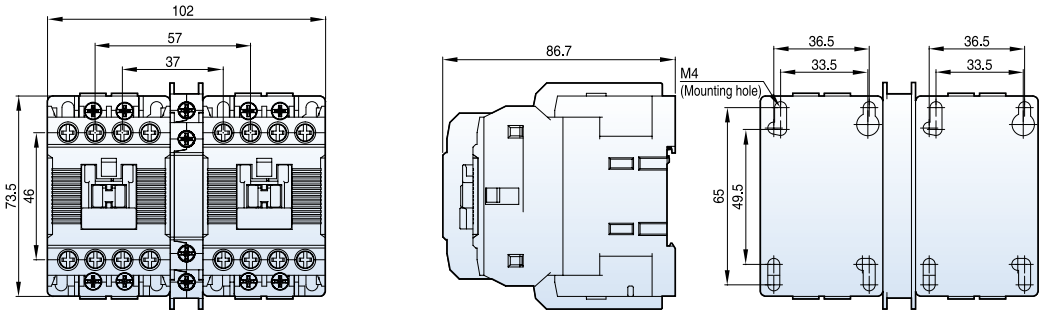

0.7kg

MC-6aR~18aR DC

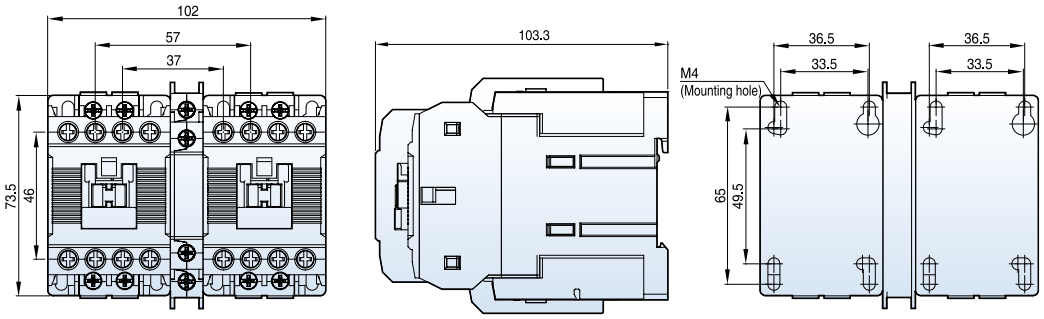

1kg

MS-6aR~18aR AC

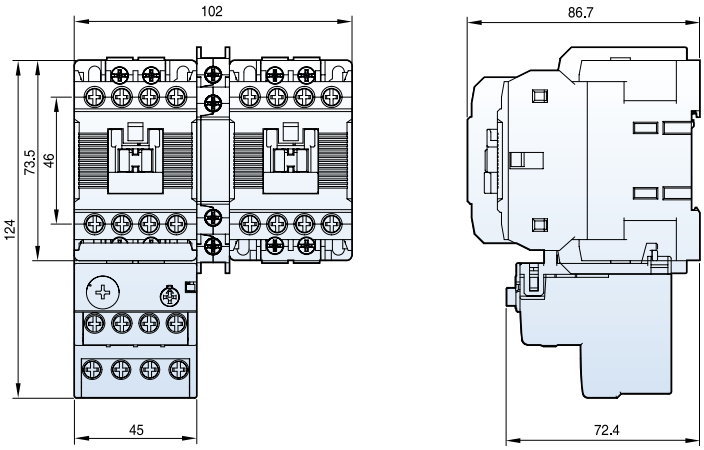

0.9kg

Reversing contactors and starters 22AF

[mm]

MC-9bR~22bR AC

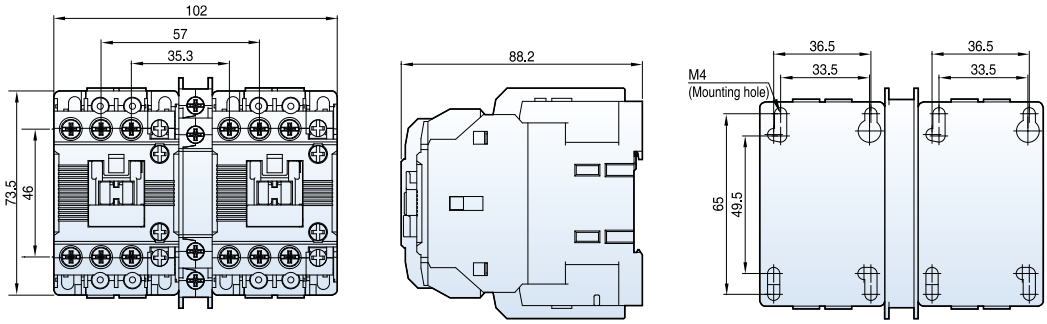

0.7kg

MC-9bR~22bR DC

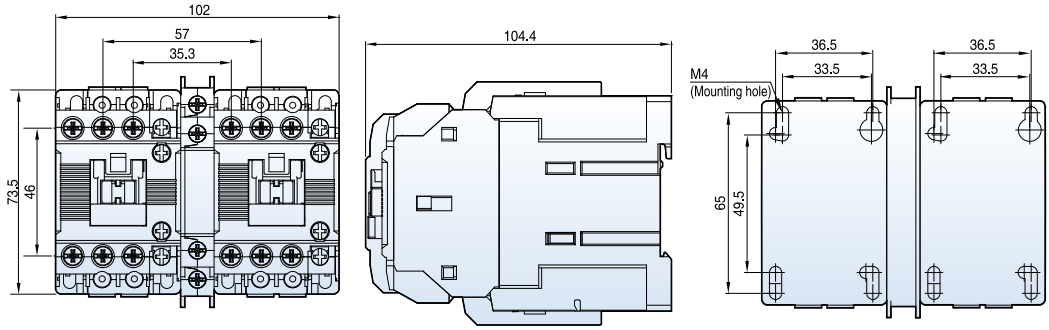

1.1kg

MS-9bR~22bR AC

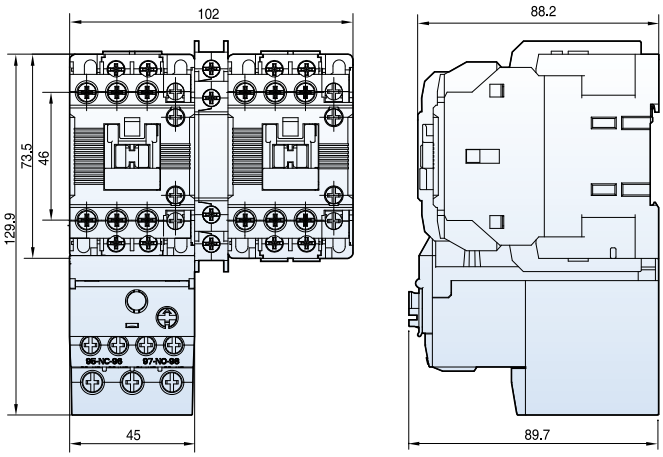

1.3kg

Reversing contactors and starters 40AF

[mm]

MC-32aR~40aR AC

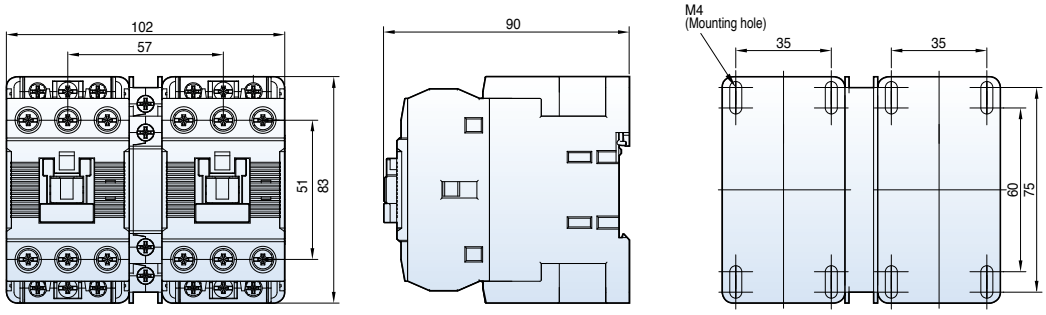

0.9kg

MC-32aR~40aR DC

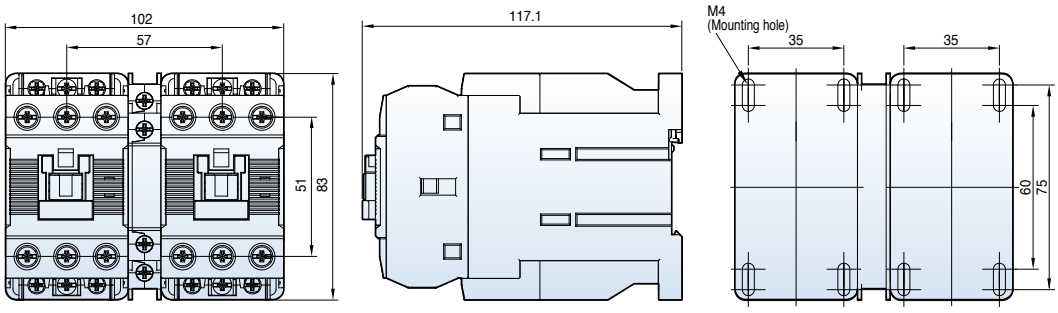

1.4kg

MS-32aR~40aR AC

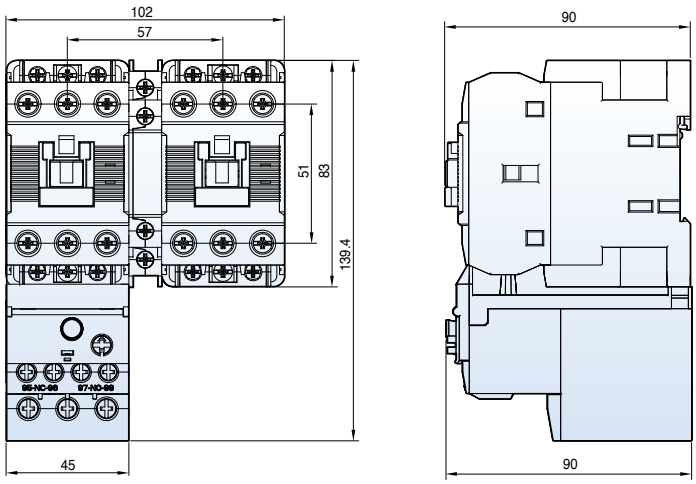

1.1kg

Reversing contactors and starters 65AF

[mm]

MC-50aR~65aR AC

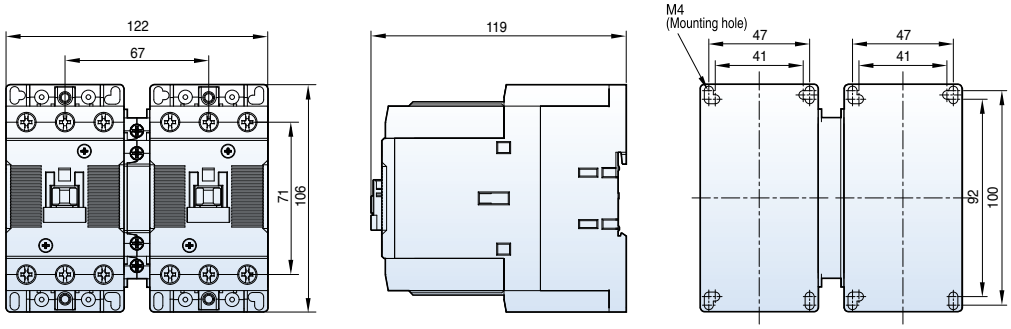

1.8kg

MC-50aR~65aR DC

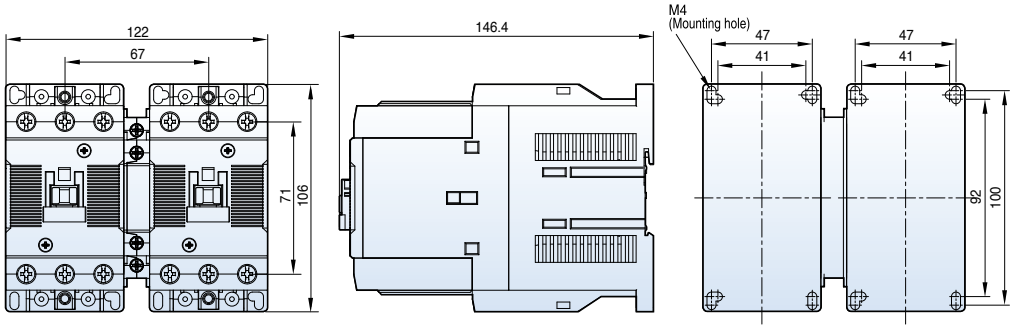

2.4kg

MS-50aR~65aR AC

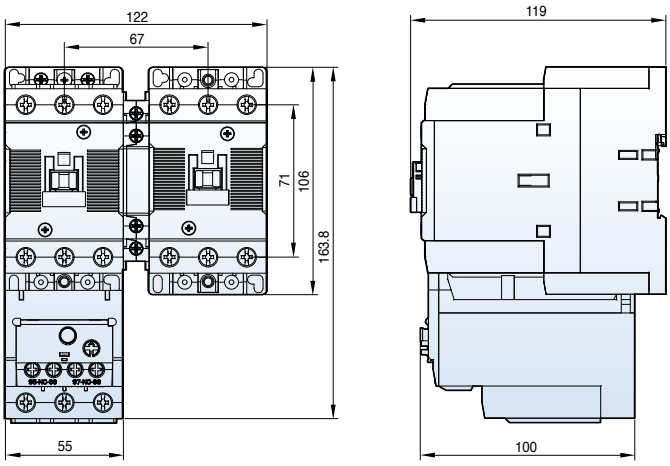

1.9kg

Reversing contactors and starters 100AF

[mm]

MC-75aR~100aR AC

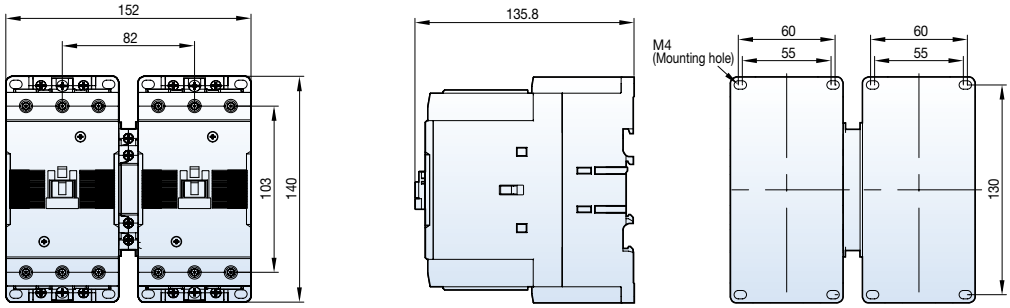

3.3kg

MC-75aR~100aR DC

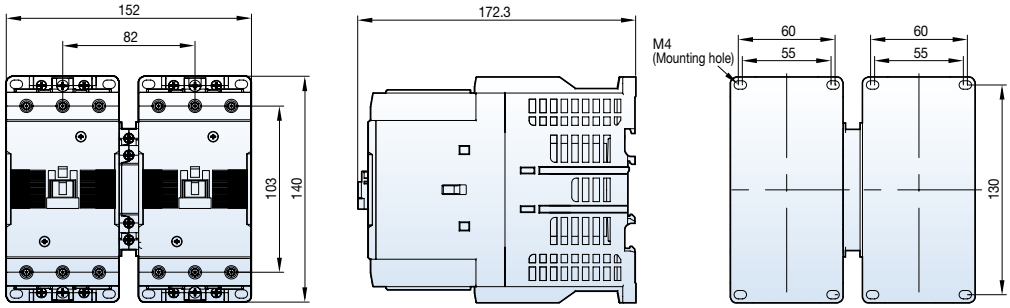

5.2kg

MS-75aR~100aR AC

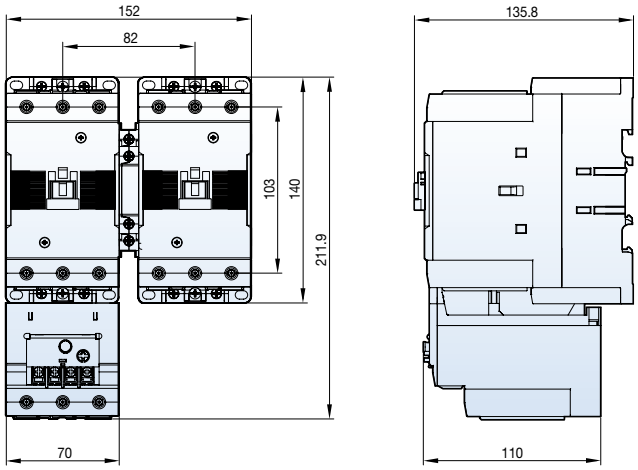

3.8kg

Reversing contactors and starters 150~800AF

[mm]

MC-130aR
MC-150aR

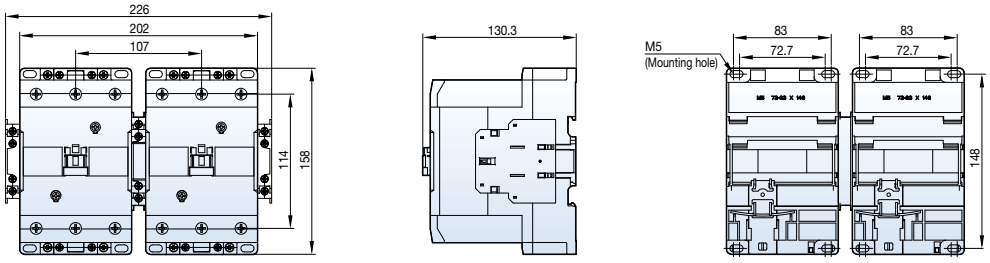

4.3kg

MC-185aR
MC-225aR

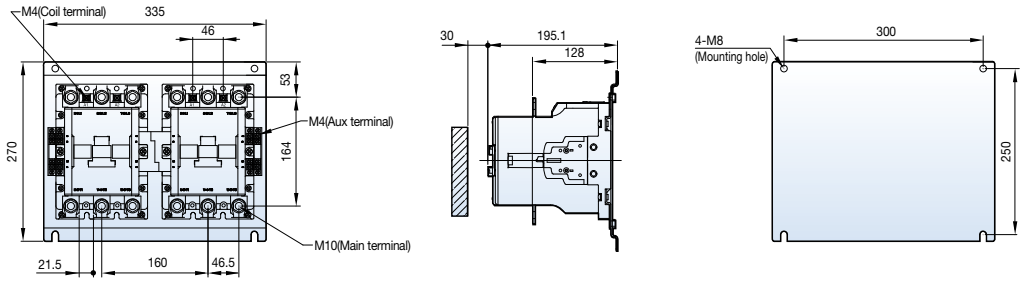

12.9kg

MC-265aR
MC-330aR
MC-400aR

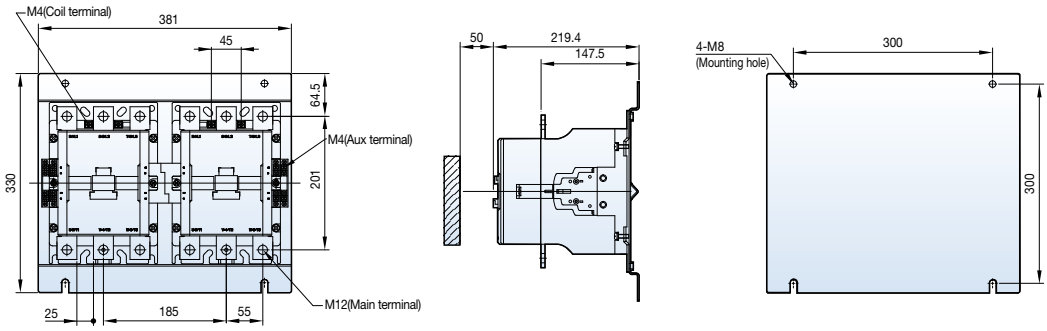

21.4kg

MC-500aR
MC-630aR
MC-800aR

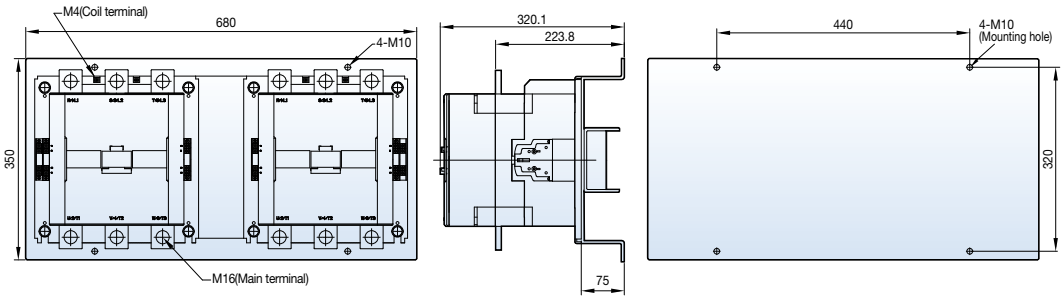

60kg

Reversing contactors and starters 150~400AF

[mm]

MS-130aR AC
MS-150aR AC

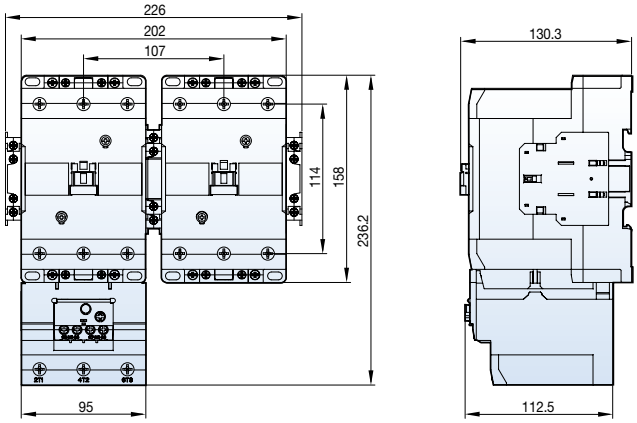

5kg

MS-185aR AC
MS-225aR AC

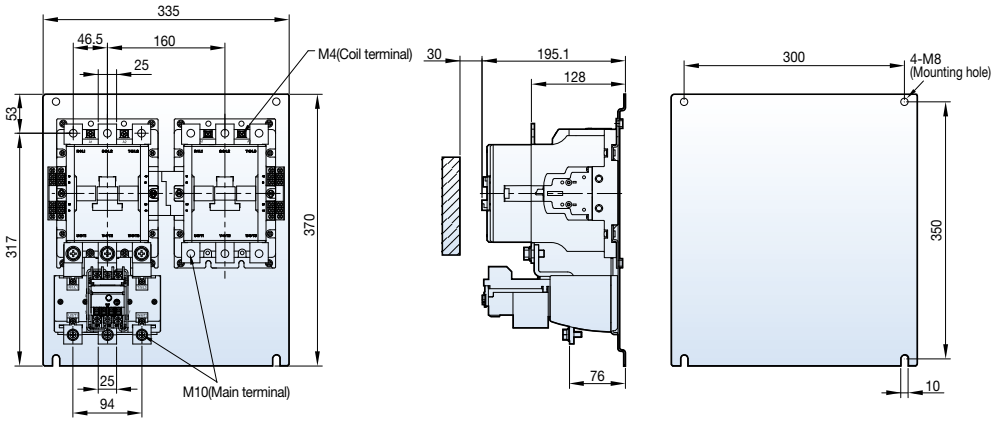

15.5kg

MS-265aR DC
MS-330aR DC
MS-400aR DC

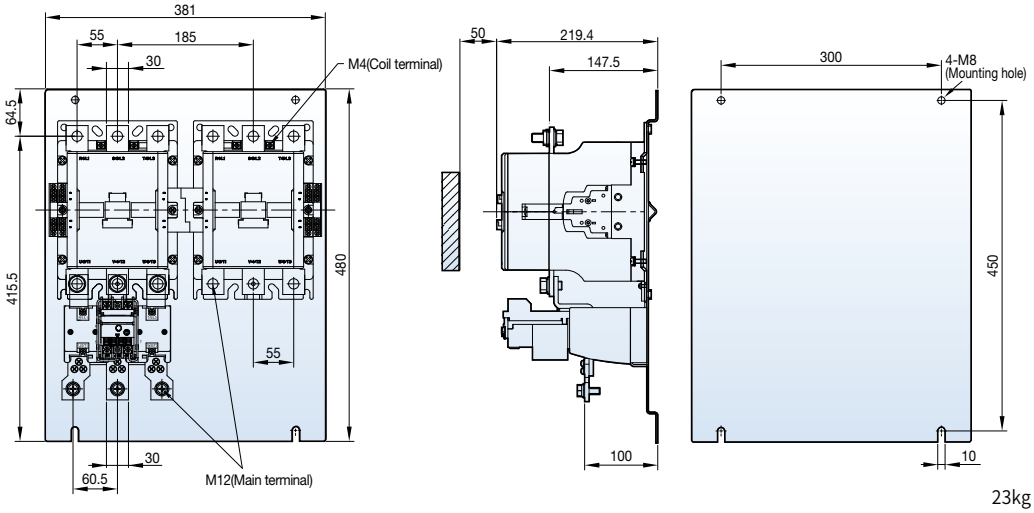

23kg

Dimension

Contactor relays

[mm]

MR-4 (D)

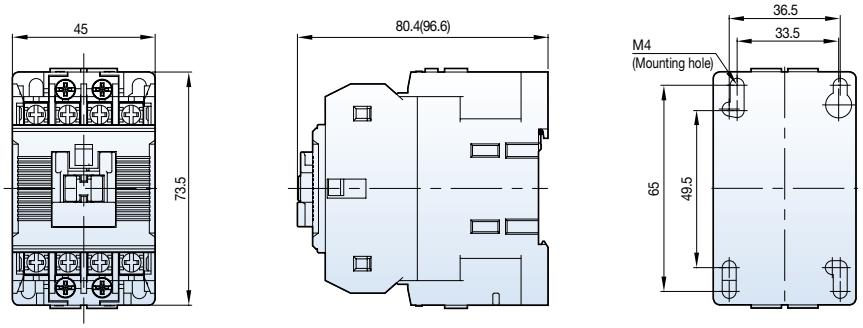

284g

MR-6 (D)

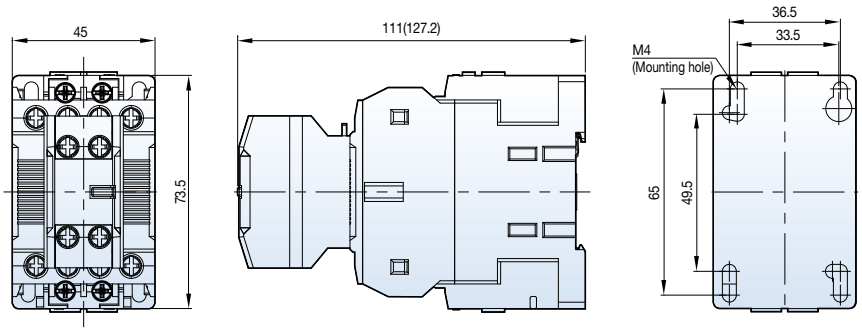

315g

MR-8 (D)

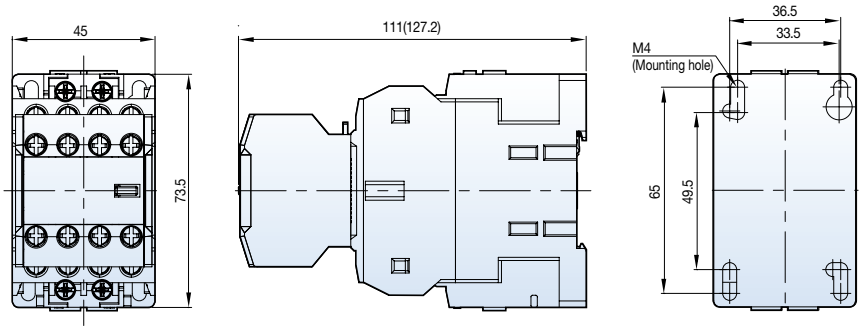

339g

Composition

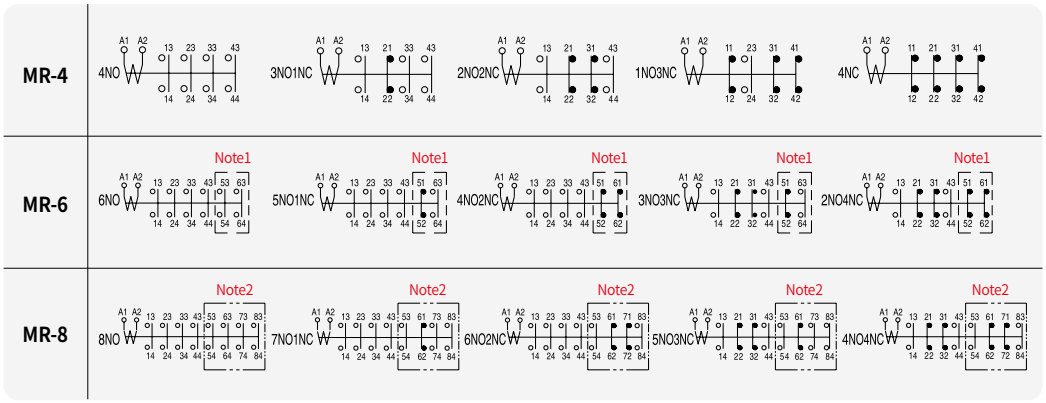

Note: 1. UA-2 : Auxiliary contact units 2. UA-4 : Auxiliary contact units
- Please refer to the contact diagram in the catalog when contactor relays MR-4, 4D and auxiliary contact units UA-2,4 are purchased separately.
- Order the auxiliary contact units separately except for the above contact units.
- ( ) : Dimension for DC control contactor relays

Latching contactors 18AF/22AF

[mm]

MC-6a~18a AC
1NO or 1NC + ML-40

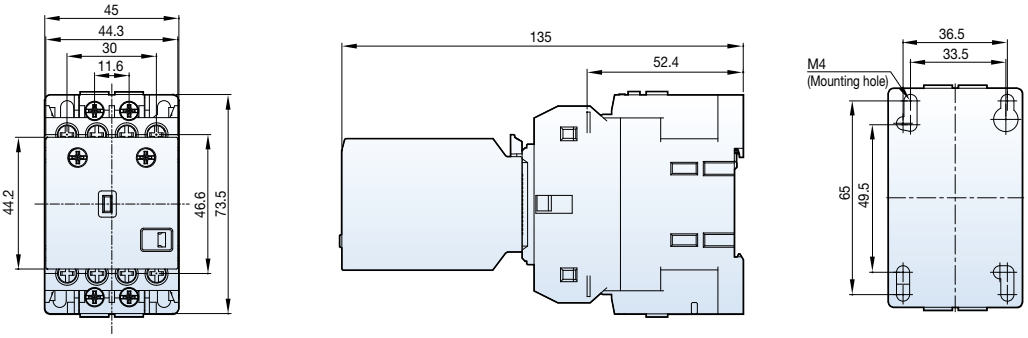

MC-6a~18a DC
1NO or 1NC + ML-40

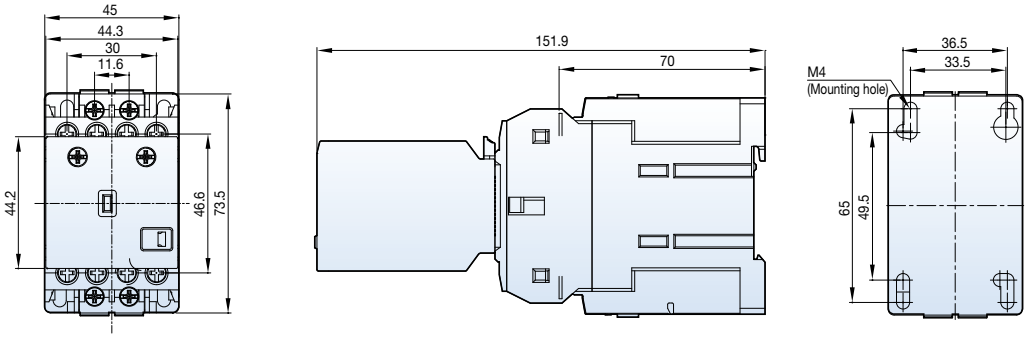

MC-9b~22b AC
1NO1NC + ML-40

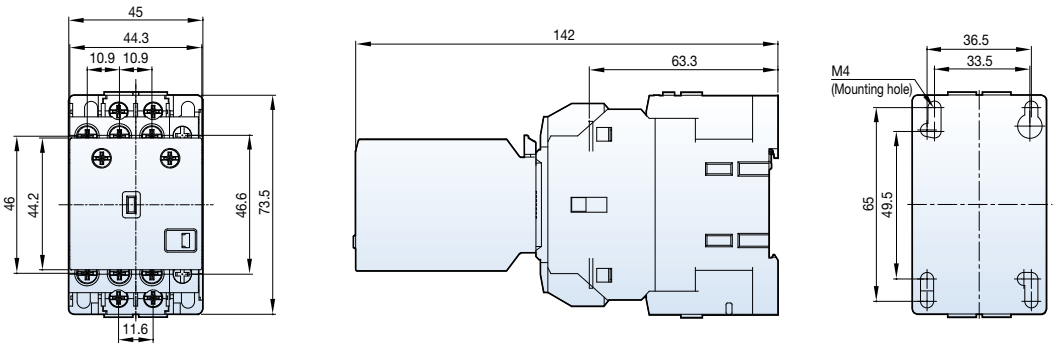

MC-9b~22b DC
1NO1NC + ML-40

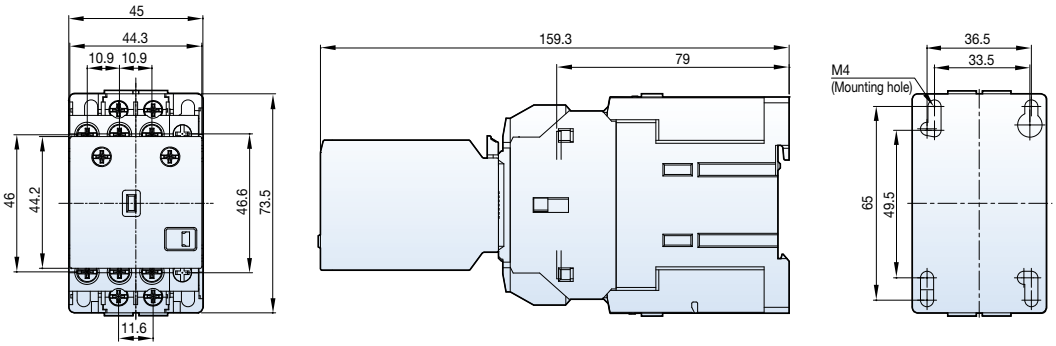

Latching contactors 40AF

[mm]

MC-32a~40a AC
+ML-40

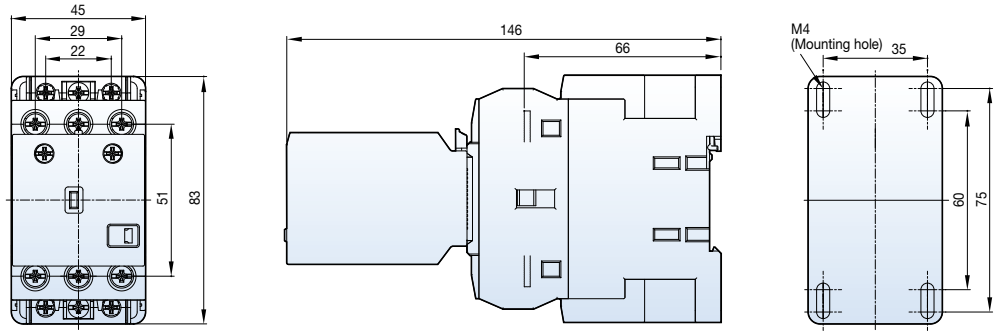

0.5kg

MC-32a~40a DC
+ ML-40

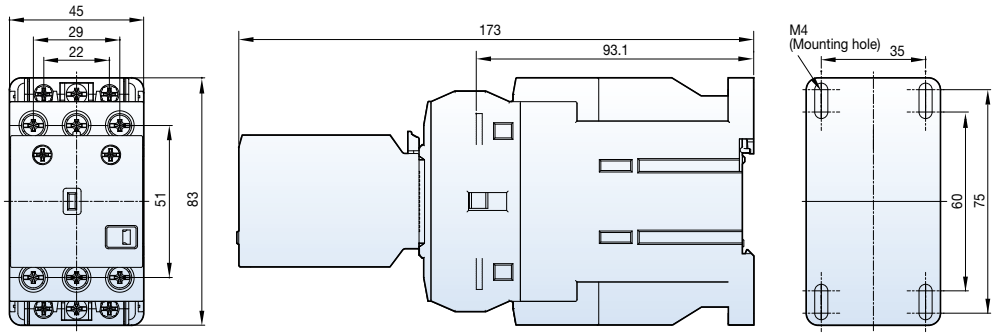

0.8kg

MC-32a~40a AC
2NO2NC + ML-40

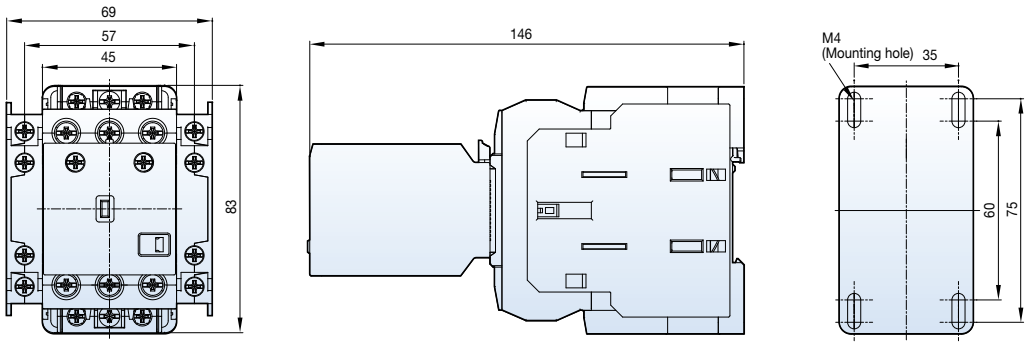

1kg

MC-32a~40a DC
2NO2NC + ML-40

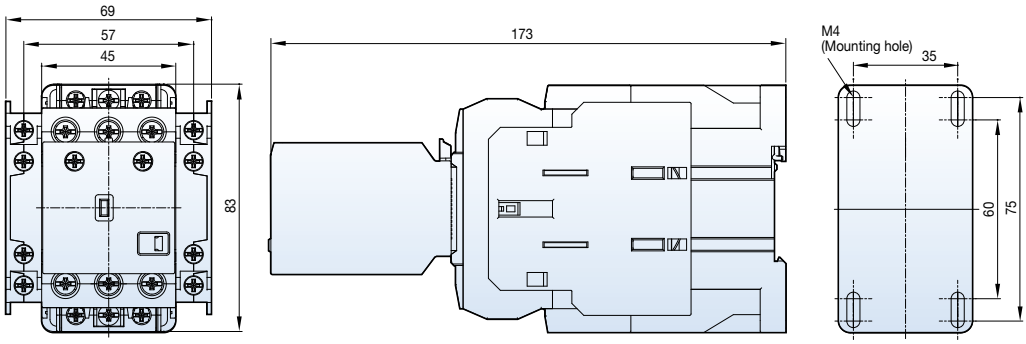

1.3kg

Latching contactors 65AF

[mm]

MC-50a~65a AC
+ ML-65

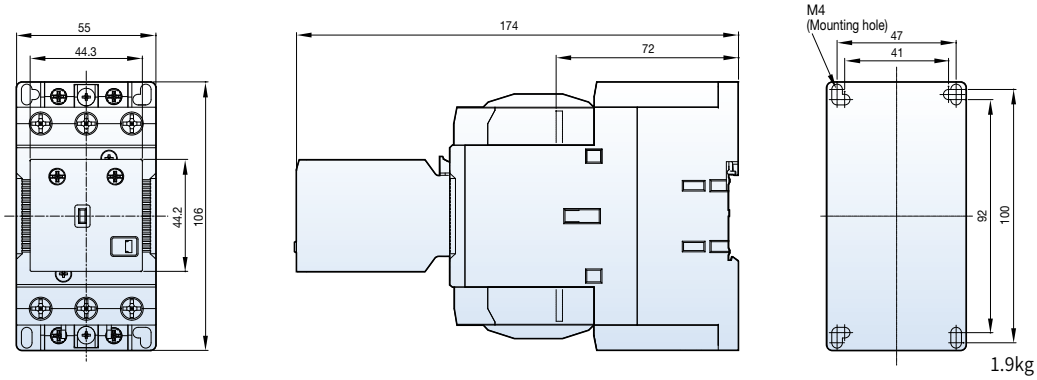

1.9kg

MC-50a~65a DC
+ ML-65

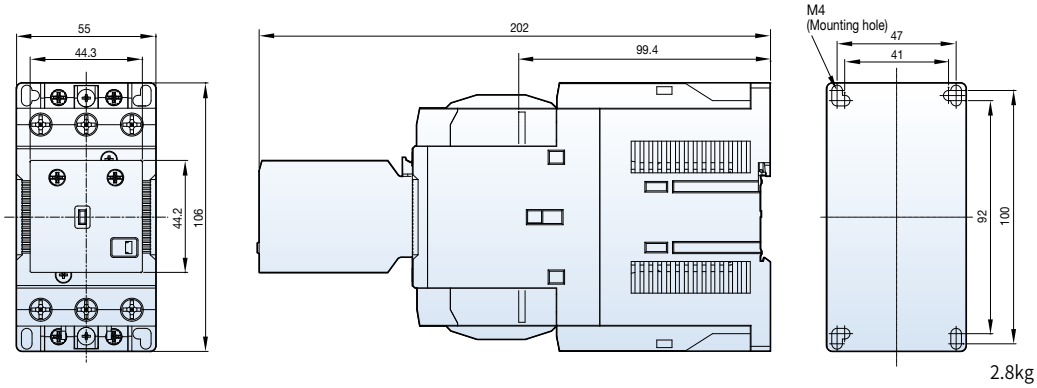

2.8kg

MC-50a~65a AC
2NO2NC + ML-65

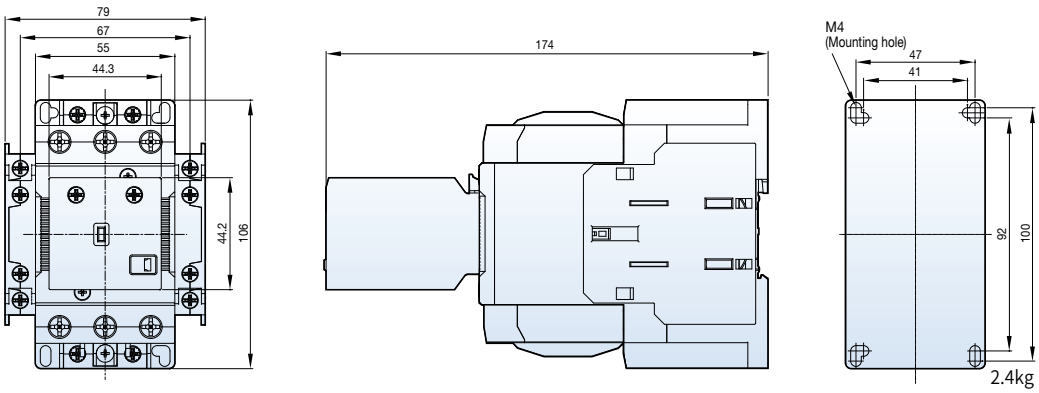

2.4kg

MC-50a~65a DC
2NO2NC + ML-65

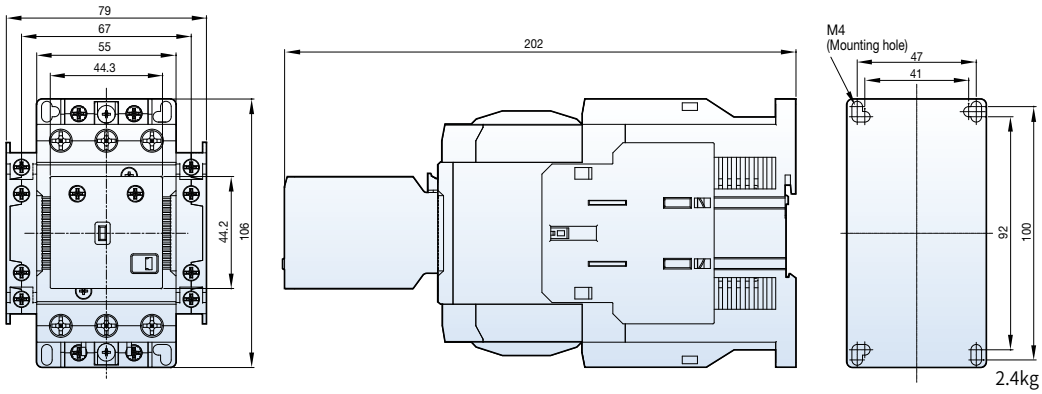

2.4kg

Latching contactors 100AF

[mm]

MC-75a~100a AC
+ ML-150

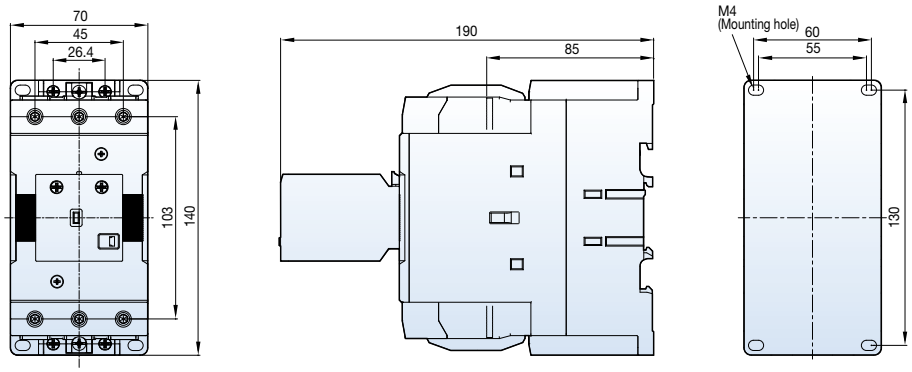

MC-75a~100a DC
+ ML-150

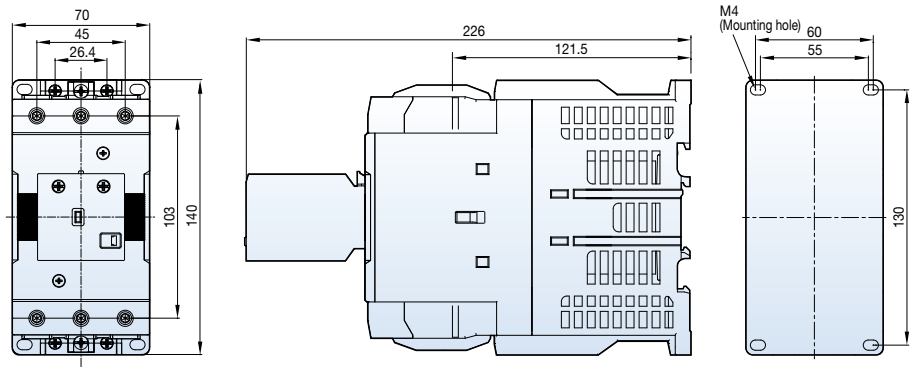

MC-75a~100a AC
2NO2NC + ML-150

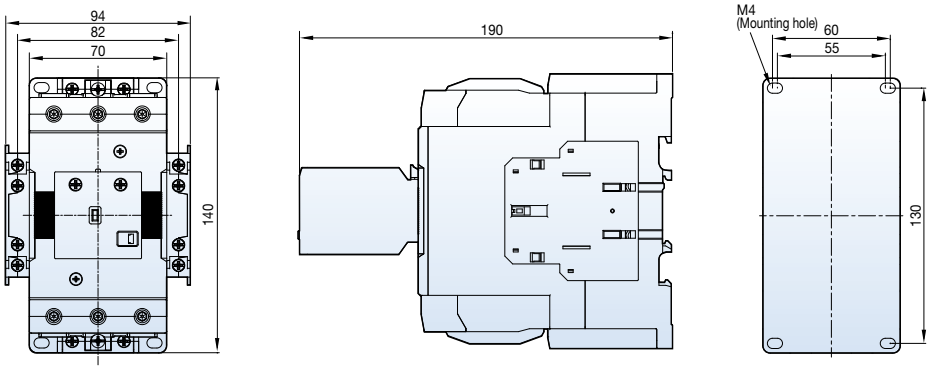

MC-75a~100a DC
2NO2NC + ML-150

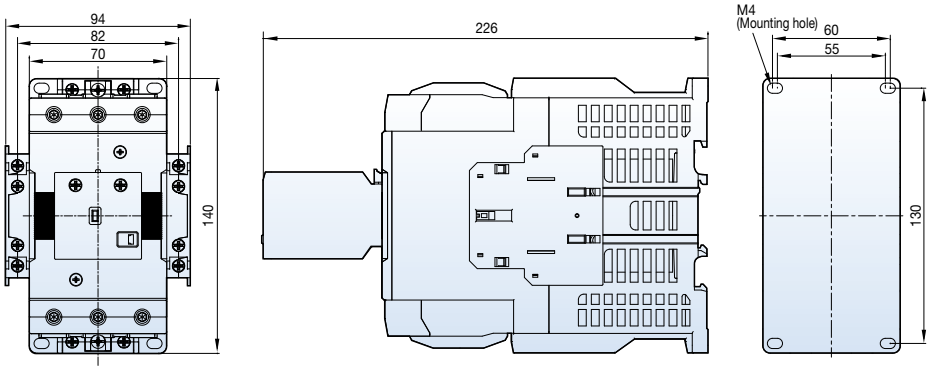

Latching contactors 150AF~400AF

[mm]

MC-130a~150a

2NO2NC + ML-150

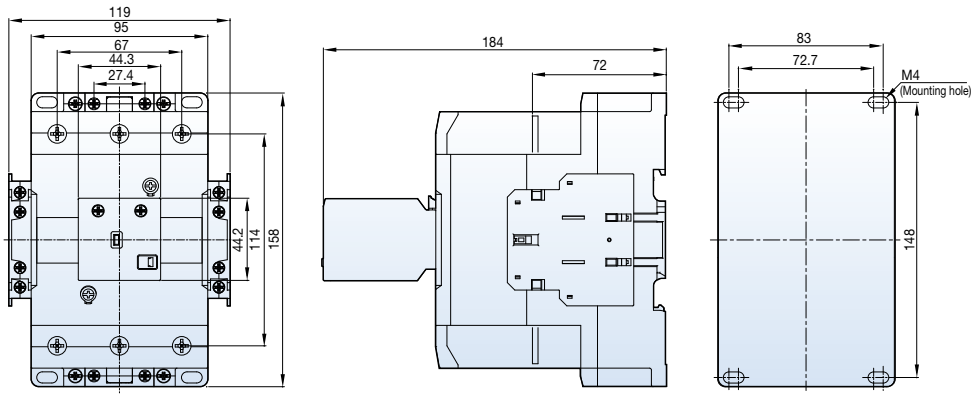

MC-185a

MC-225a

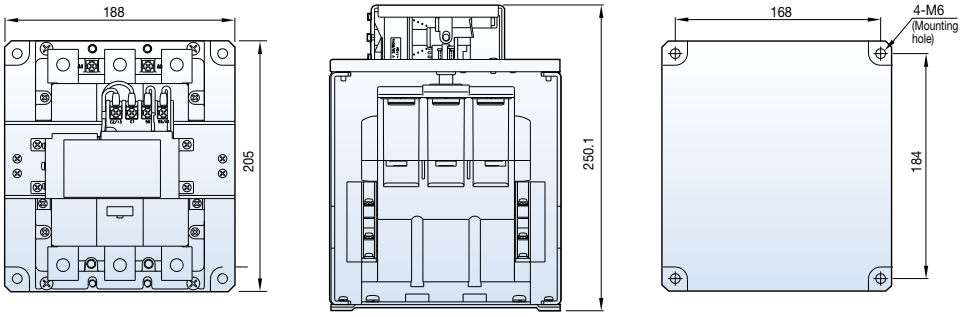

7.4kg

MC-265a

MC-330a

MC-400a

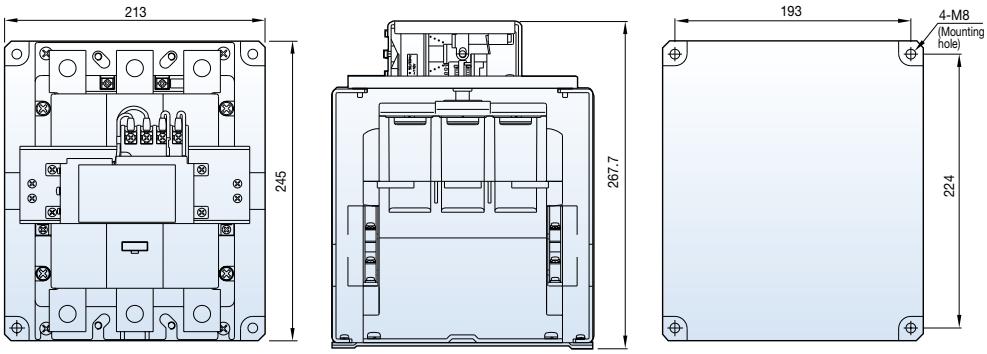

11.6kg

Composition

MC-185a/L~400a/L

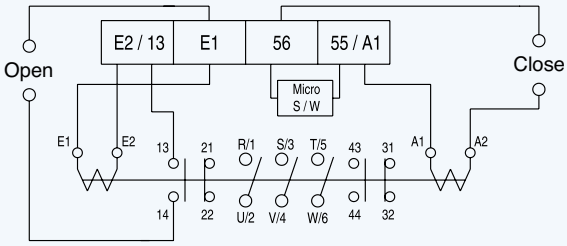

4-pole contactors MC-6a/4~22a/4

[mm]

MC-6a/4~18a/4 AC

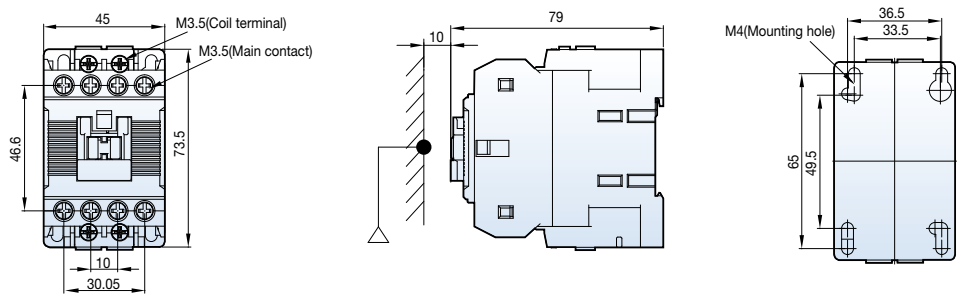

0.3kg

MC-6a/4~18a/4 DC

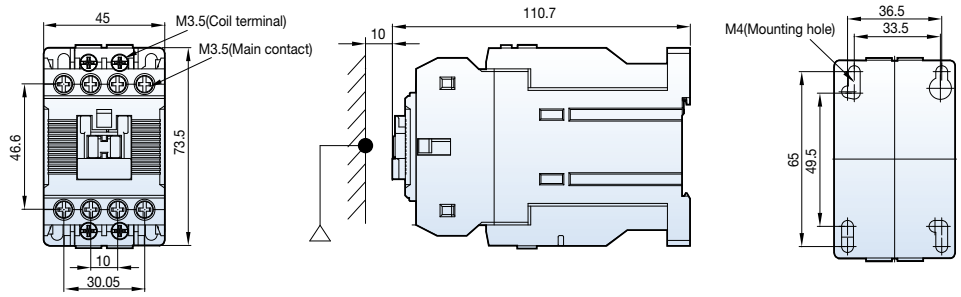

0.45kg

MC-22a/4 AC

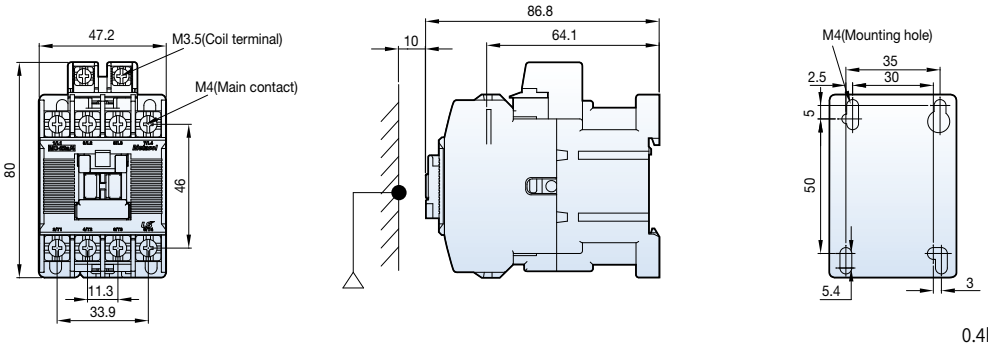

0.4kg

MC-22a/4 DC

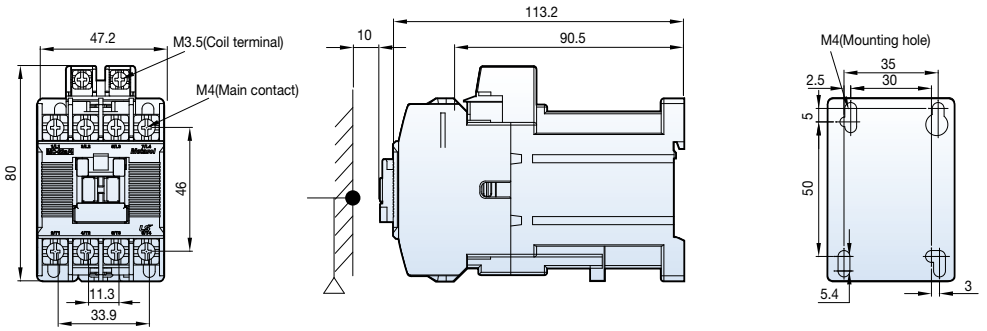

0.5kg

4-pole contactors MC-32a/4~85a/4

[mm]

MC-32a/4~40a/4 AC

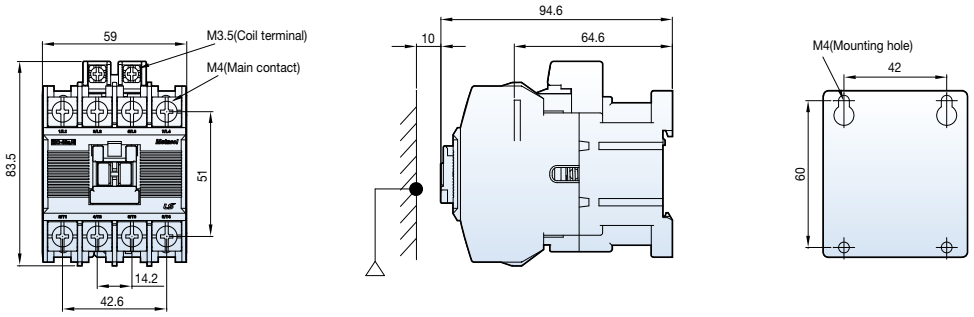

0.59kg

MC-32a/4~40a/4 DC

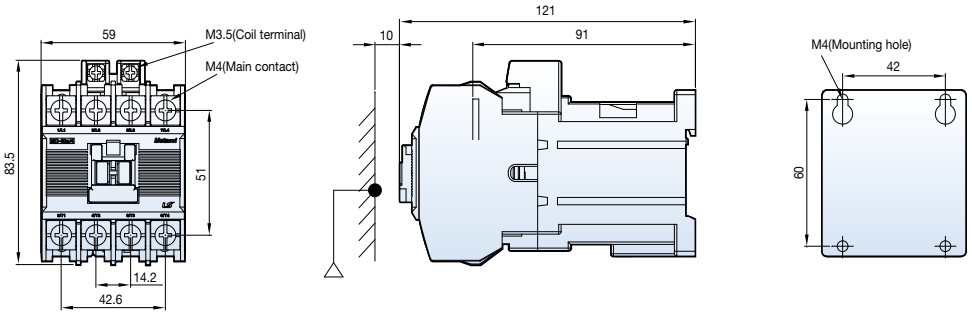

0.7kg

MC-50a/4~85a/4 AC

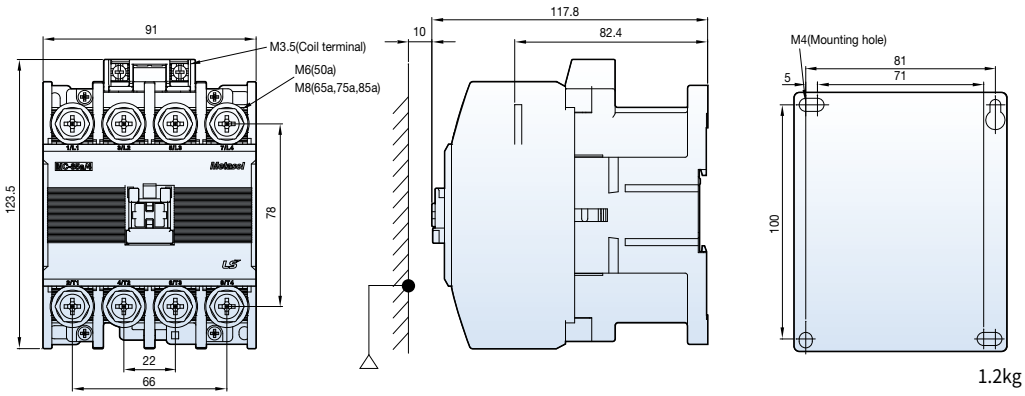

1.2kg

MC-50a/4~85a/4 DC

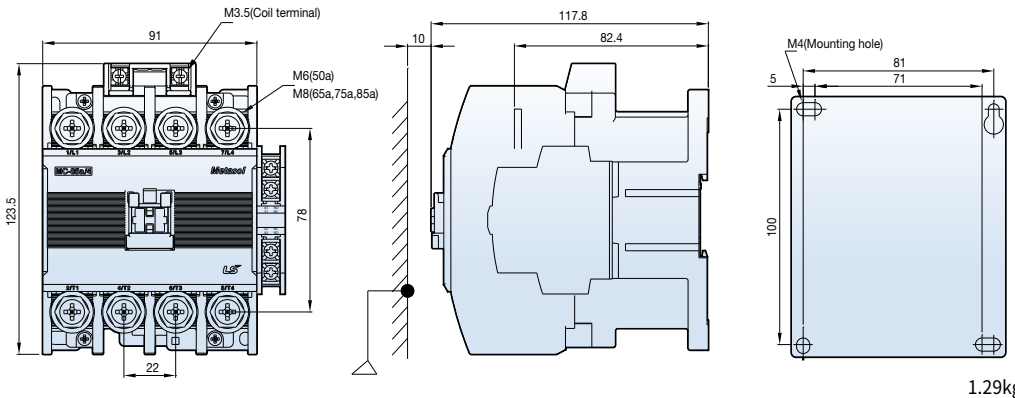

1.29kg

Note: 1b contact is used for coil control. Therefore, only 1a contact should be used when possible.

4-pole contactors MC-100a/4~800a/4

[mm]

MC-100a/4
MC-130a/4
MC-150a/4
MC-185a/4
MC-225a/4

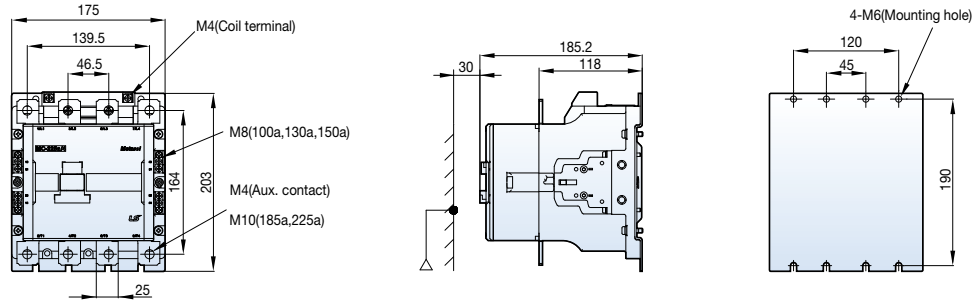

5.6kg

MC-265a/4
MC-330a/4
MC-400a/4

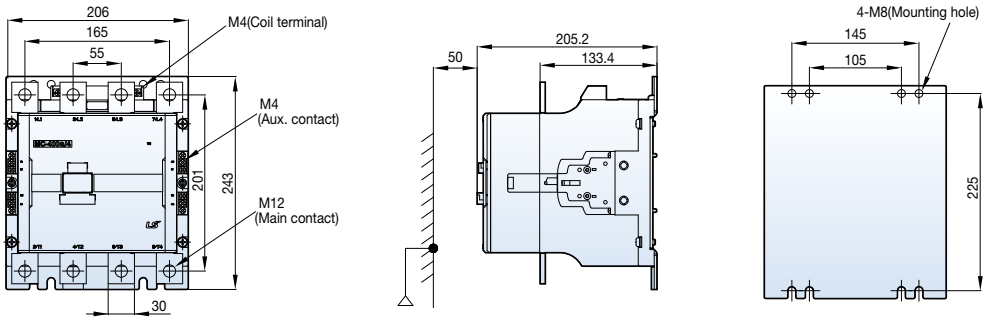

9.9kg

MC-500a/4
MC-630a/4
MC-800a/4

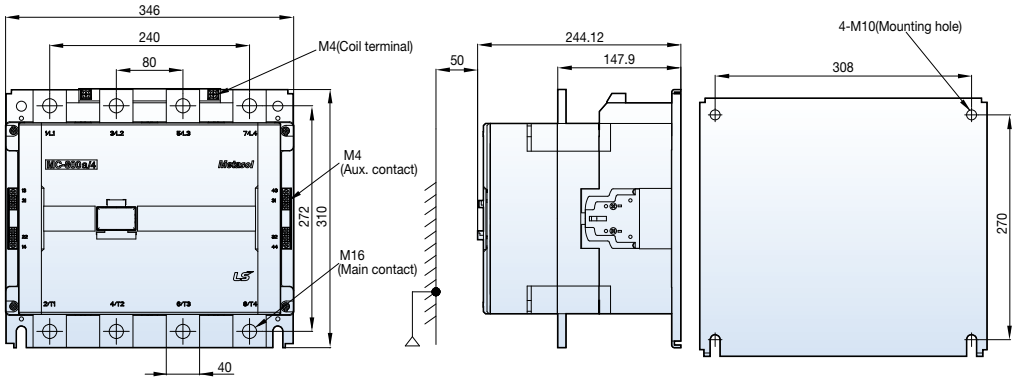

26.3kg

Enclosed motor starters, Mold enclosure

[mm]

MW-9bM~22bM

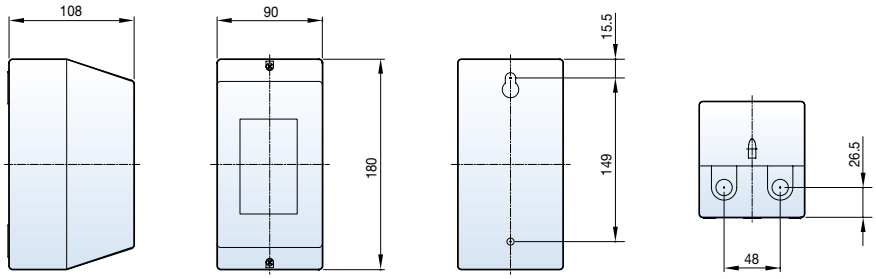

0.8kg

MW-9bMB~22bMB

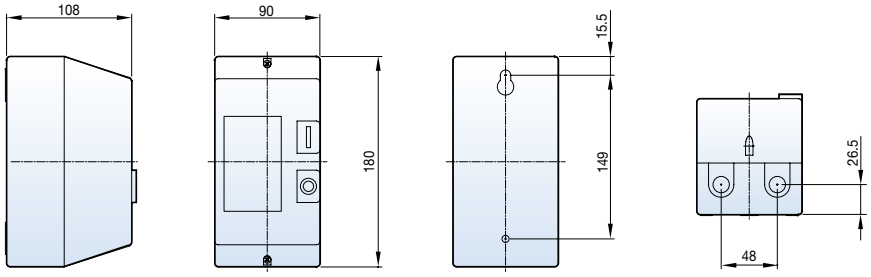

0.8kg

Circuit diagram

MW-9bM~22bM

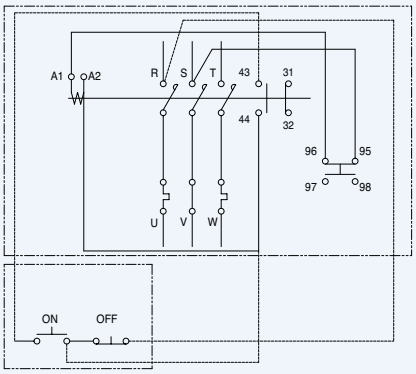

MW-9bMB~22bMB

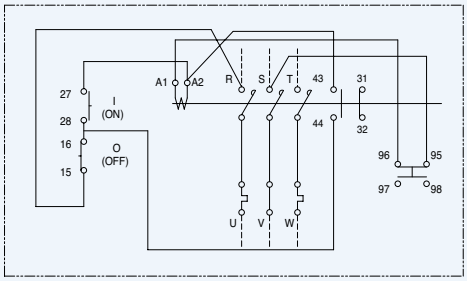

Dimension

Enclosed motor starters, Steel enclosure

[mm]

MW-6a~100a

MW-9b~22b

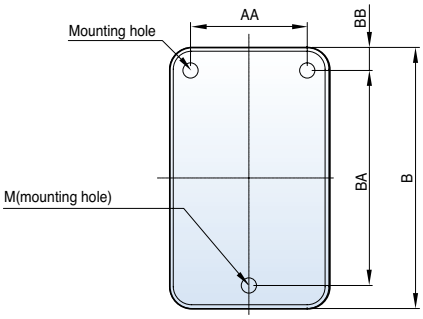

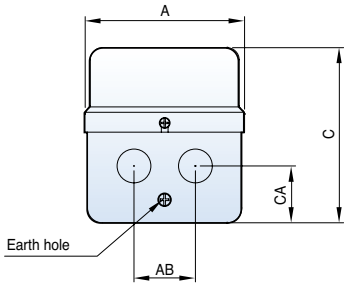

Type	A	AA	AB	B	BA	BB	C	CA	M	N	Weight(kg)
MW-9b~22b, 6a~18a	104	76	40	170	140	15	114	41	M5	Ø22	1.1
MW-32a, 40a	145	95	55	245	165	40	130	50	M5	Ø35	1.6
MW-50a, 65a	160	120	74	290	220	35	141	50	M5	Ø35	2.7
MW-75a, 85a, 100a	160	120	74	290	220	35	161	67	M5	Ø35	3.6

Circuit diagram

MW-6a~18a, MW-9b~22b

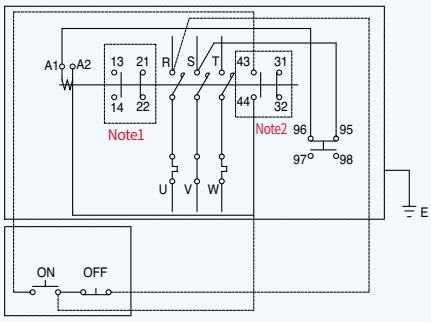

MW-32a~100a

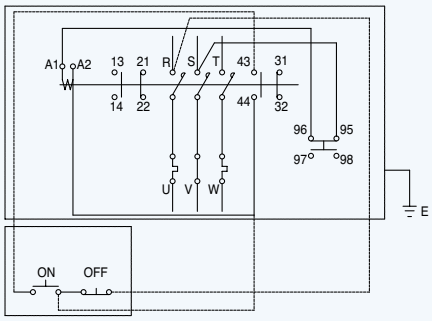

Note: 1. In case of adding the auxiliary contact unit (1NO1NC)
2. See below for MC-6a~18a (1NO)

[mm]

MW-6aB~100aB

MW-9bB~22bB

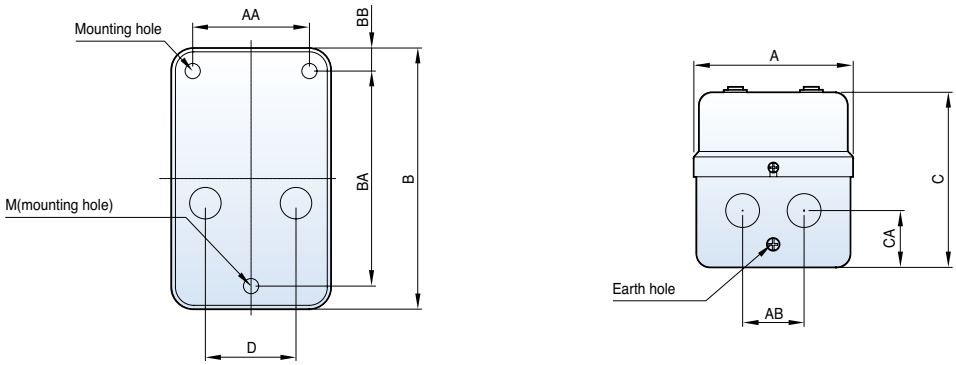

Type	A	AA	AB	B	BA	BB	C	CA	D	M	N	Weight(kg)
MW-9bB~22bB, 6aB~18aB	104	76	40	170	140	15	114	41	59	M5	Ø22	1.1
MW-32aB, 40aB	145	95	55	245	165	40	130	50	97	M5	Ø35	1.6
MW-50aB, 65aB	160	120	74	290	220	35	141	50	114	M5	Ø35	2.7
MW-75aB, 85aB, 100aB	160	120	74	290	220	35	161	67	114	M5	Ø35	3.6

Circuit diagram

MW-6aB~18aB, MW-9bB~22bB

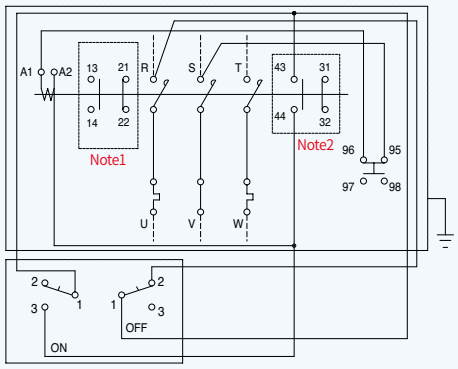

MW-32aB~100aB

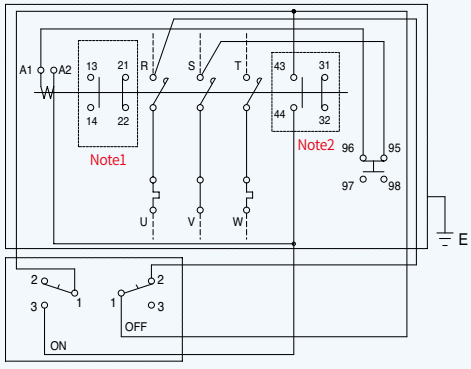

Note: 1. In case of adding the auxiliary contact unit (1NO1NC)
2. See below for MC-6a~18a (1NO)

Capacitor contactors

MC-9b~40a with AC-9, MC-50a~65a with AC-50, MC-75a~100a with AC-75

[mm]

MC-9b~22b with AC-9

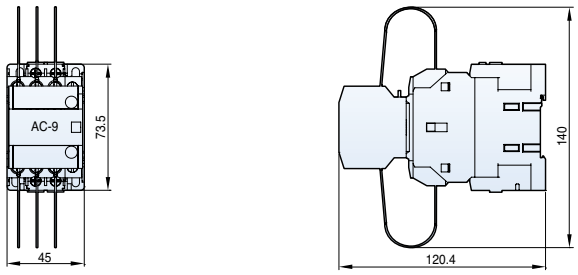

MC-32a,40a with AC-9

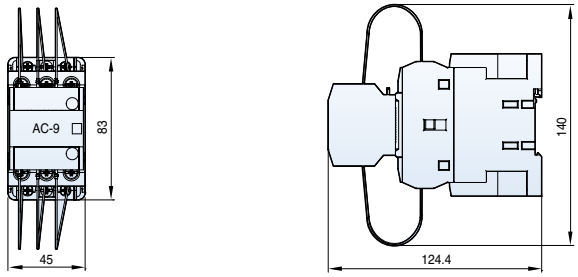

MC-50a,65a with AC-50

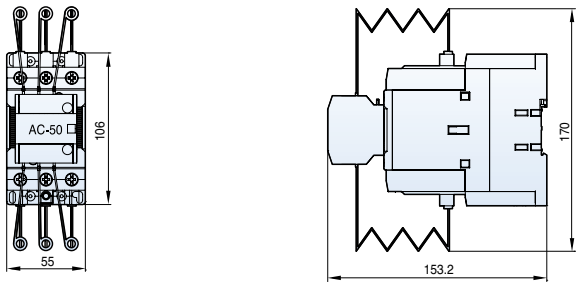

MC-75a~100a with AC-75

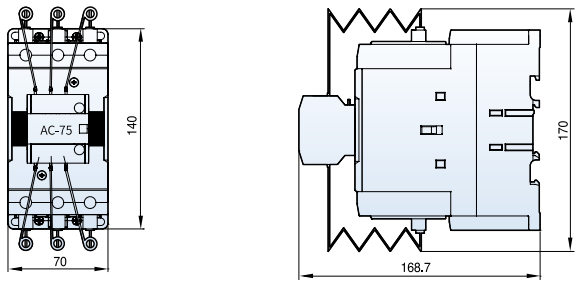

Circuit diagram

MC-9b~22b with AC-9	MC-32a, 40a with AC-9, MC-50a~65a with AC-50, MC-75a~100a with AC-75
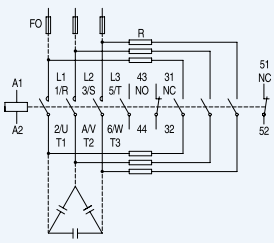	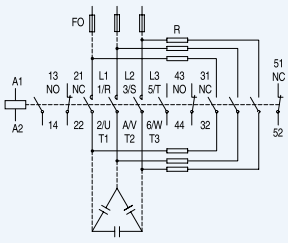

2-pole AC contactors GMC-10P2~40P2

[mm]

GMC-10P2
GMC-20P2
GMC-25P2
GMC-30P2
GMC-35P2
GMC-40P2
(TSBS Type)

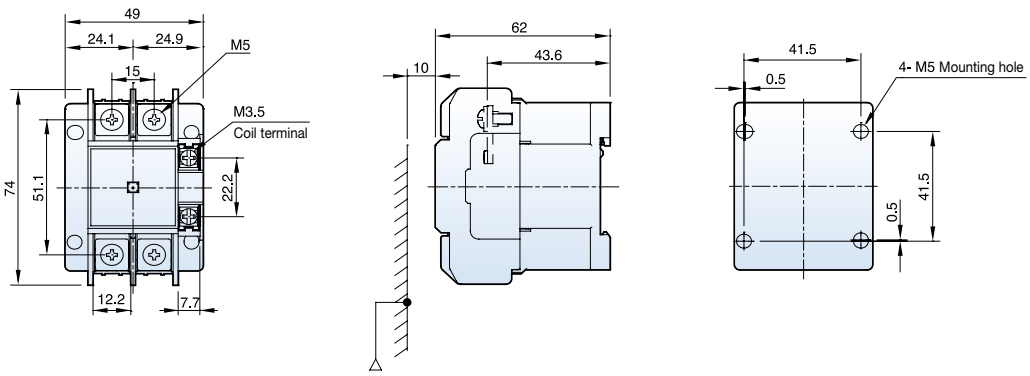

1.29kg

GMC-10P2
GMC-20P2
GMC-25P2
GMC-30P2
GMC-35P2
GMC-40P2
(TQBS Type)

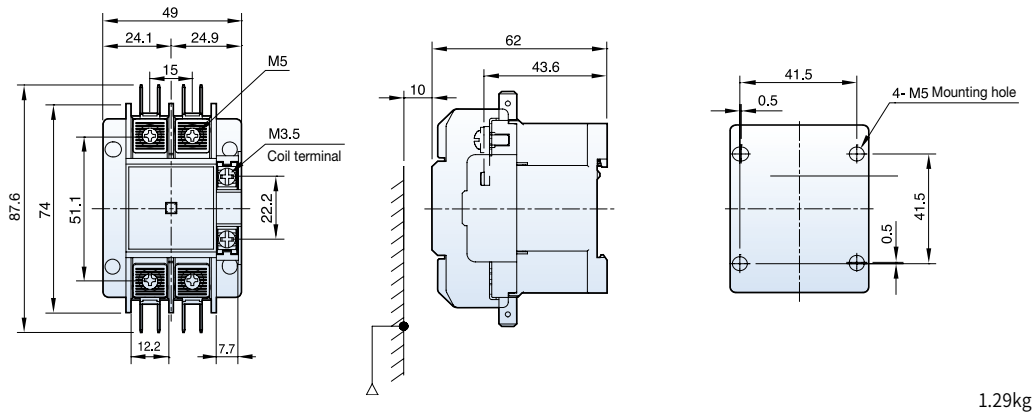

1.29kg

Composition

GMC - 10P2~40P2

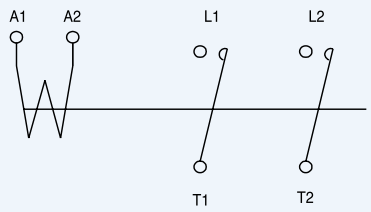

Terminal

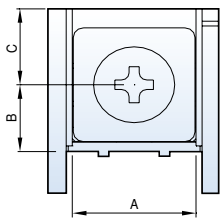

Type	Terminals	Screw	Wire(mm²)	Torque(kgf·cm)	A×B×C(mm)
GMC-10P2~40P2	Main	M5	1-16	26	12.2×7×8
	Coil	M3.5	1-2.5	12	7.7×7.5×4.5

Dimension

3-pole AC Contactors GMC-20D, 25D

[mm]

GMC-20D
GMC-25D

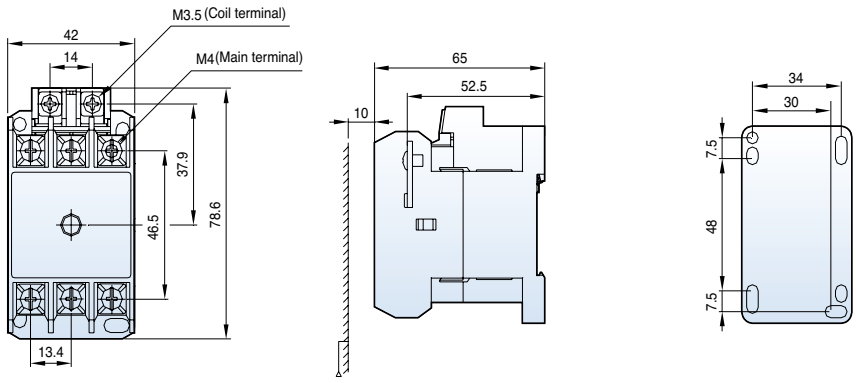

Contact arrangement

2NO	3NO	2NO1NC
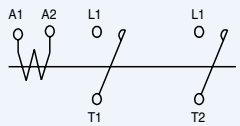	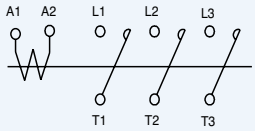	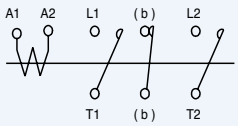

Terminal

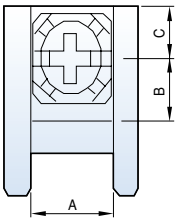

Type	Screw	Wire(mm²)	Torque(kgf·cm)	A×B×C(mm)
GMC-20D~25D	M4	1-10	15	9.4×5×85.1
Coil~	M3.5	1.25~2	12	8×5×4.9

Single-pole AC Contactors MC-65aSP

MC-65aSP

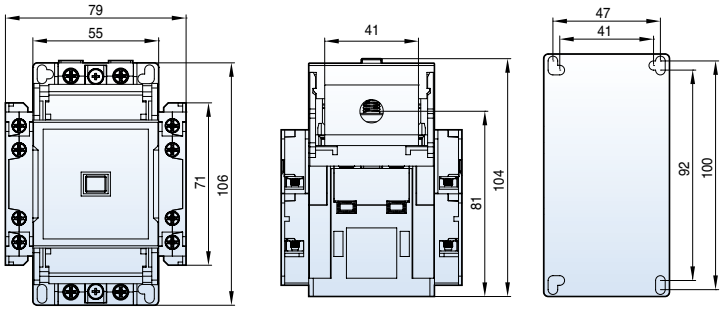

0.65kg

Composition

without auxiliary contact	with auxiliary contacts
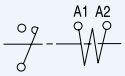	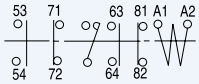

DC Contactors MD-30a, 60a, 100a

[mm]

MD-30a AC(DC)
2NO2NC

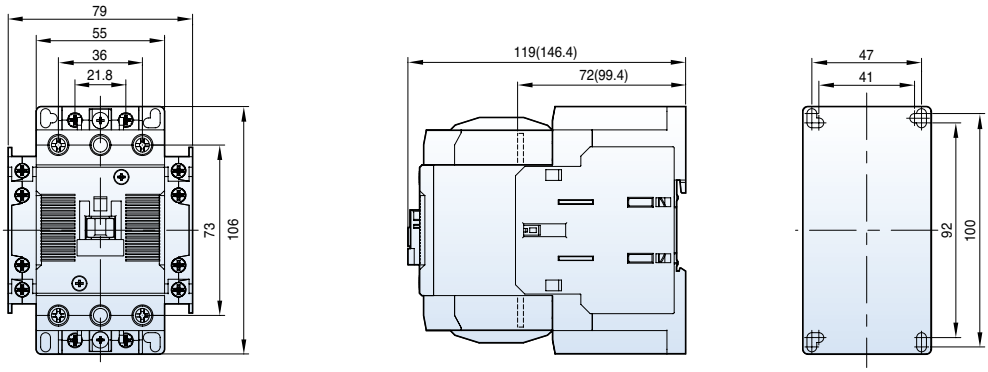

MD-60a,100a AC(DC)
2NO2NC

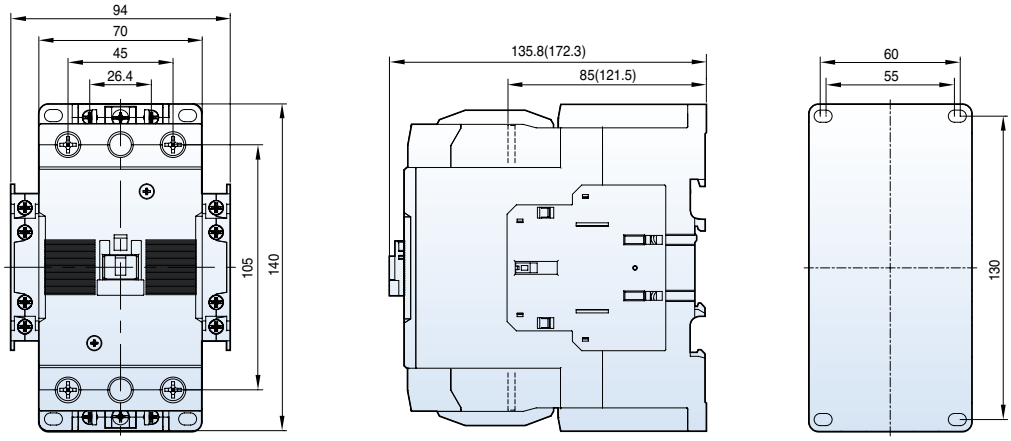

Composition

MD-30a, 60a, 100a

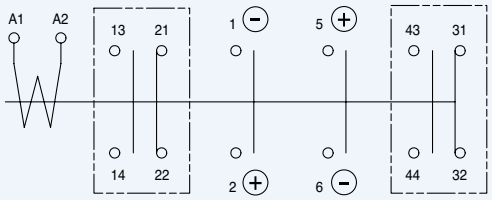

Contact arrangement

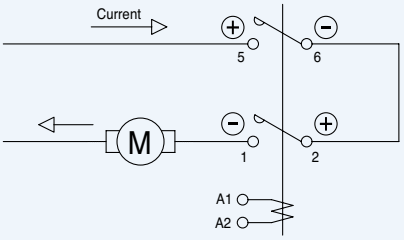

Dimension

[mm]

UA-1

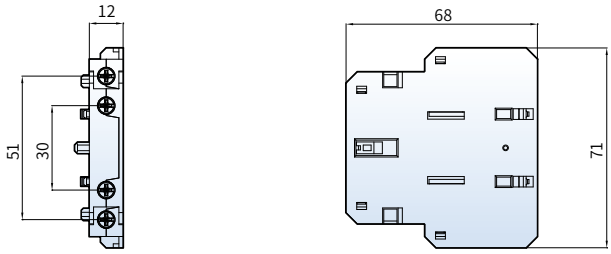

UA-2

UA-4

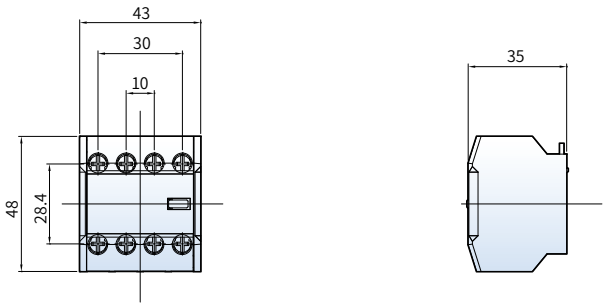

UR-02

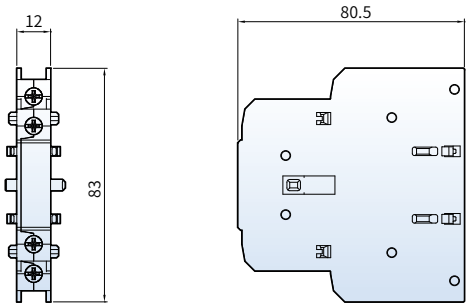

Overload relays

[mm]

MT-12

100g

MT-32

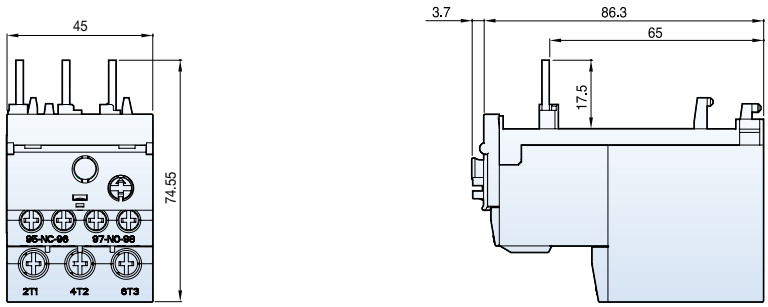

167g

MT-63

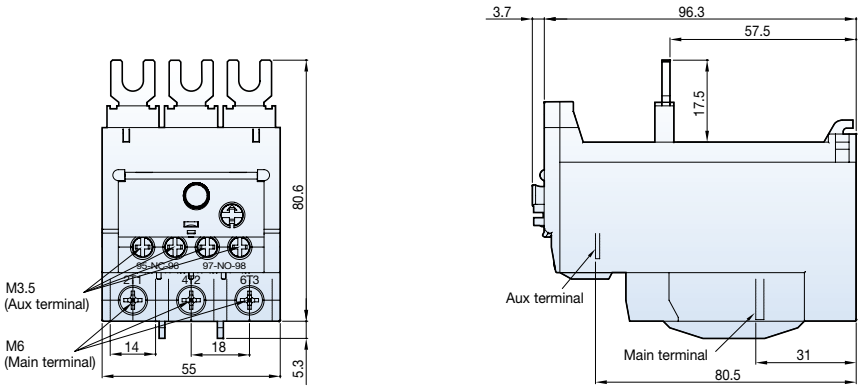

303g

MT-95

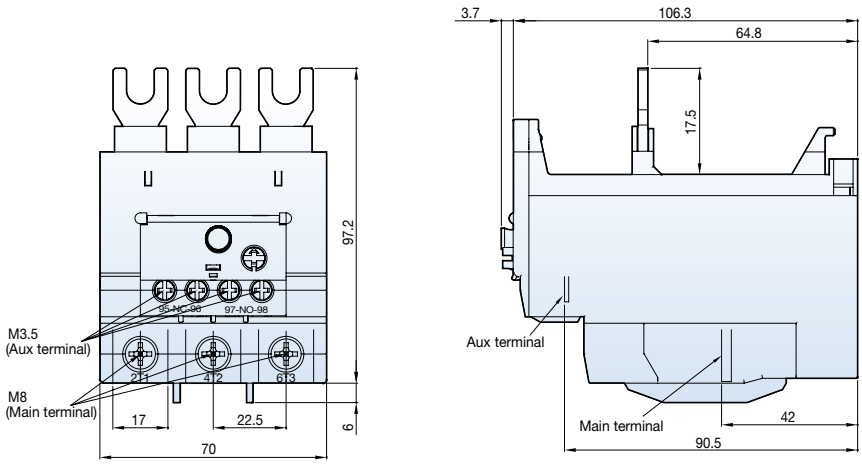

474g

Dimension

[mm]

MT-150

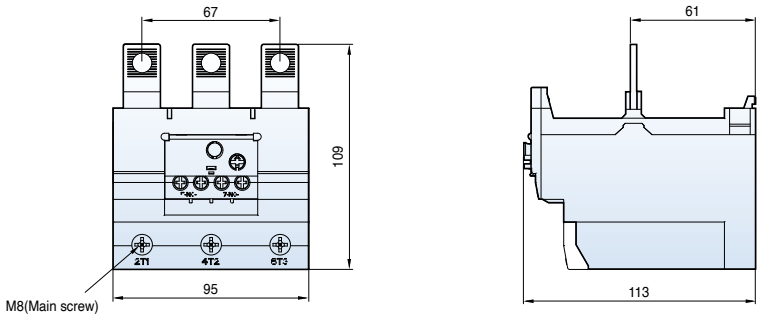

0.7kg

MT-225

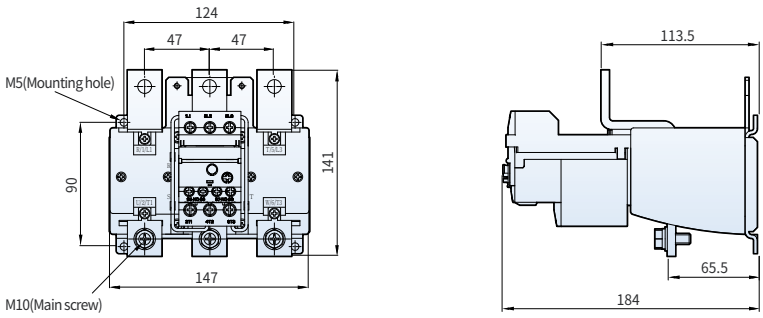

2.5kg

MT-400

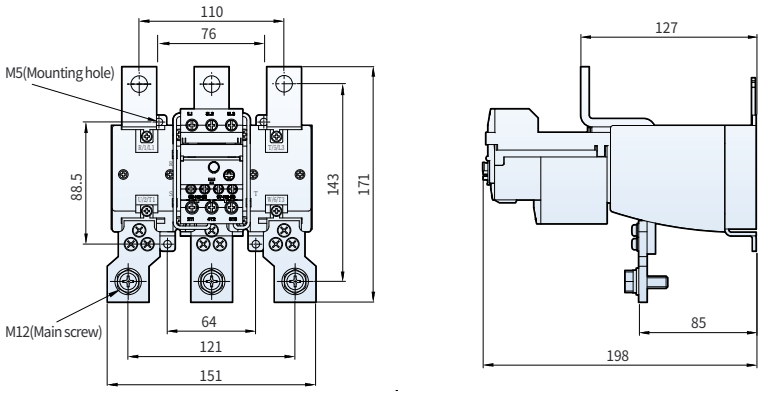

Note: MT-225,400 *M5 (Mounting hole) is not applicable when connecting to magnetic contactor

2.6kg

MT-800

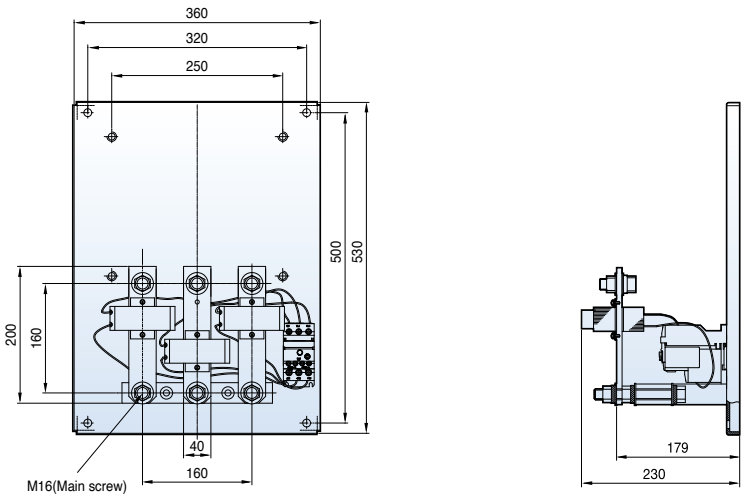

11.5kg

Overload relays

[mm]

UZ-12

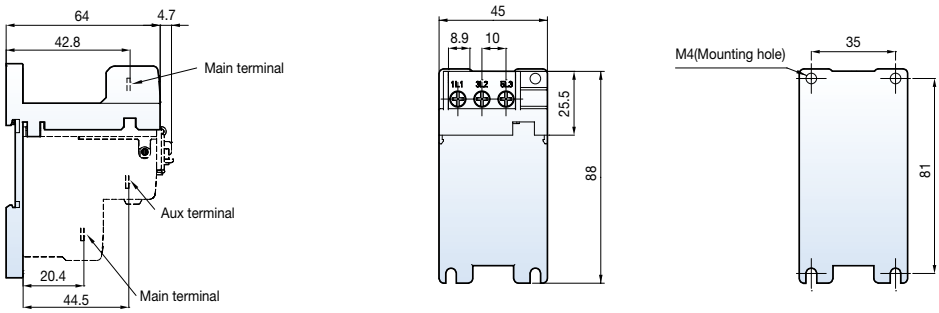

35g

UZ-32

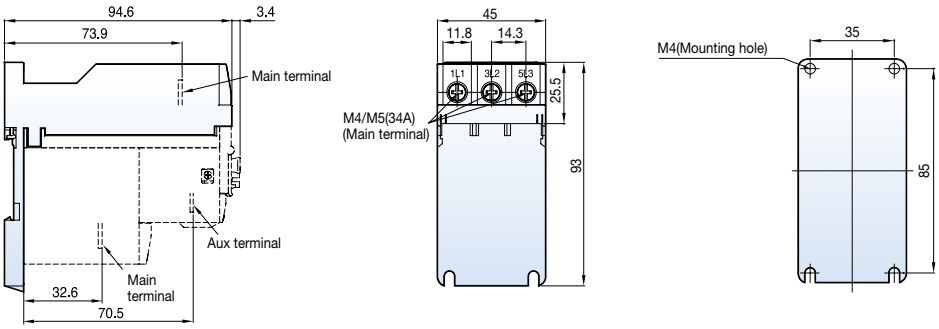

68g

UZ-63

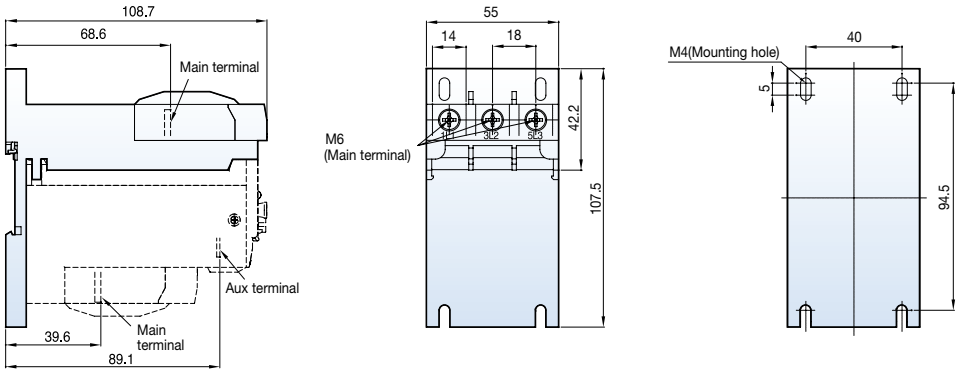

134g

Dimension (Separate mount)

[mm]

UZ-95

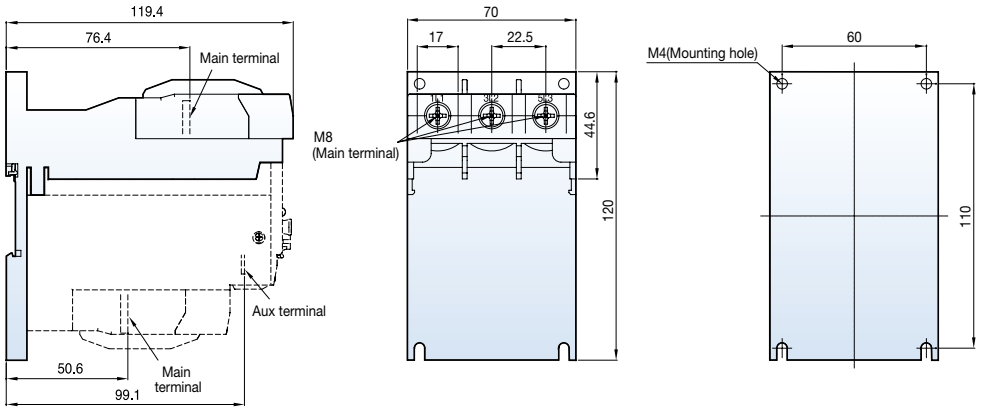

230g

UZ-150

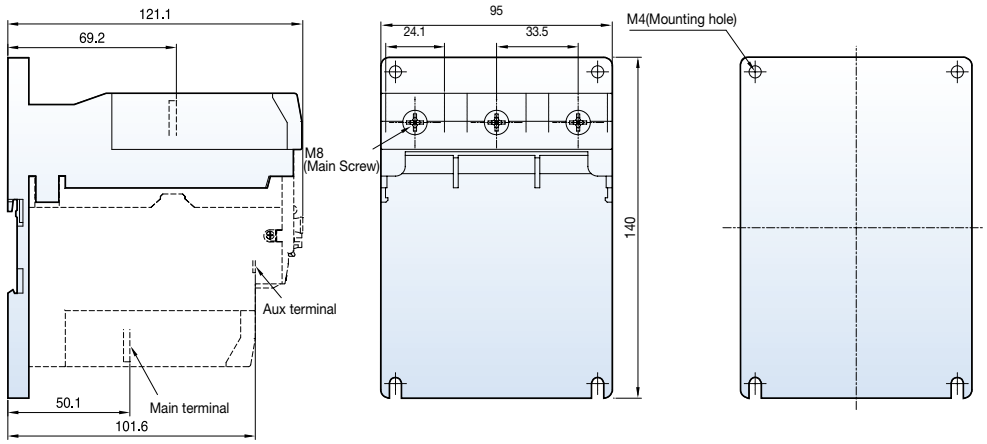

284g

Dimension

AD - 9

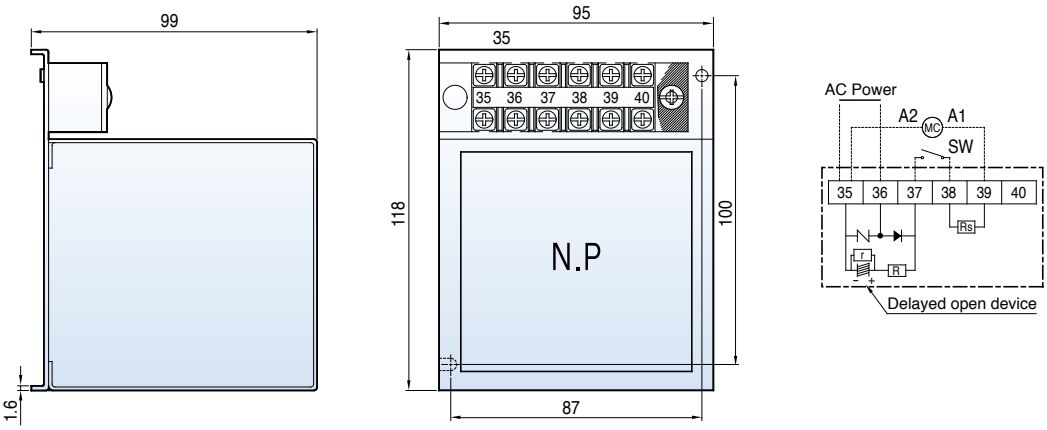

AD - 50
AD - 100
AD - 300
AD - 600

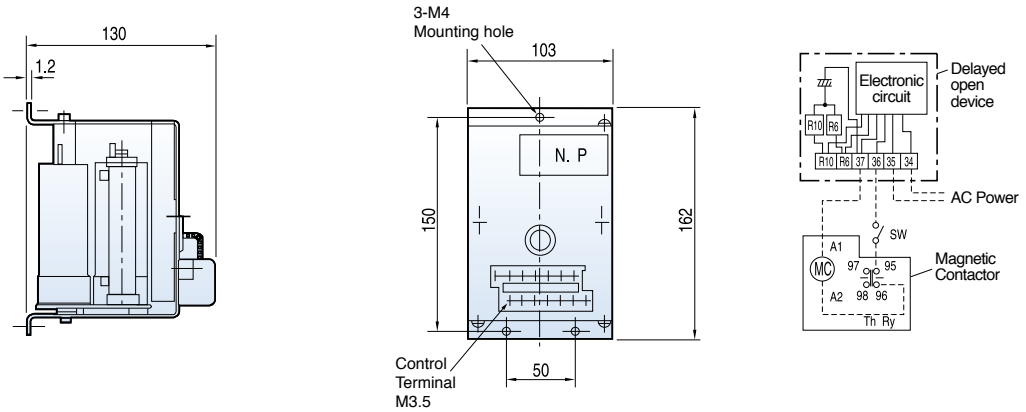

0.5kg

Control circuit diagram

AD - 9	AD - 50~600
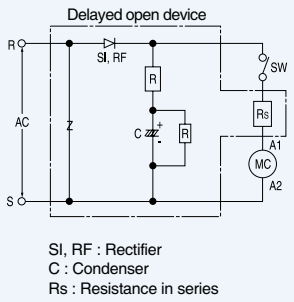	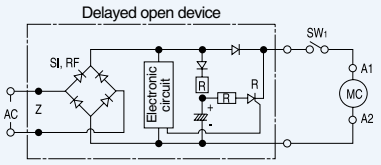

SI, RF : Rectifier
C : Condenser
Rs : Resistance in series

SI, RF : Rectifier
C : Condenser
Rs : Resistance in series

Electronic timer unit

ON delay timer

On time(Close MC) delay of magnetic contactors 1~30sec

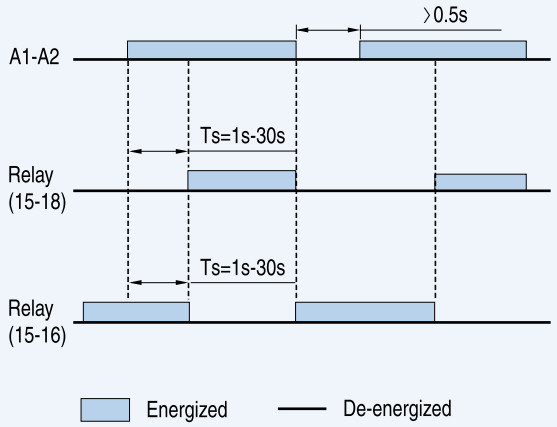

Circuit diagram

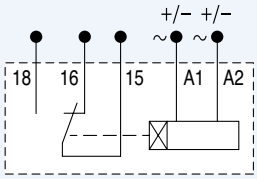

OFF delay timer

Off time(Open MC) delay of magnetic contactors 1~30sec

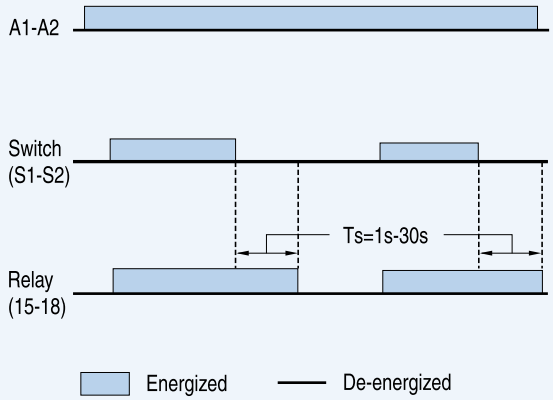

Circuit diagram

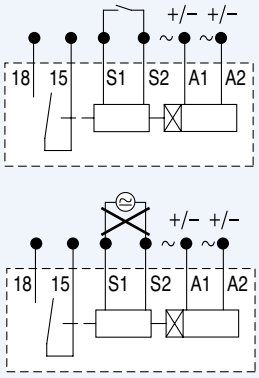

Dimension

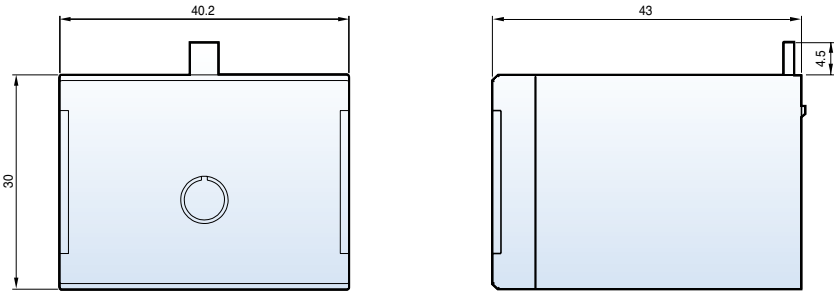

Contact arrangement

Contactors

MC-6a~18a

1NO

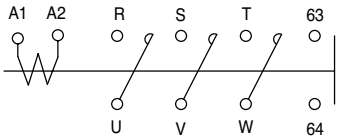

1NC

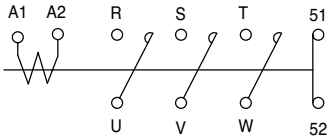

MC-9b~22b

1NO1NC

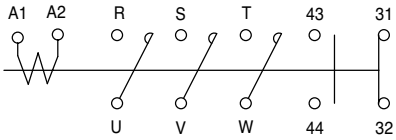

MC-32a~2650a

2NO2NC

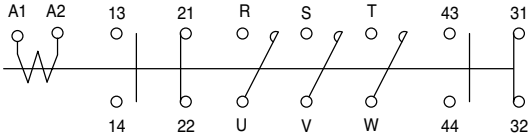

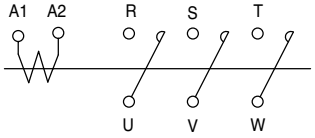

Motor starters

MS-6a~150a

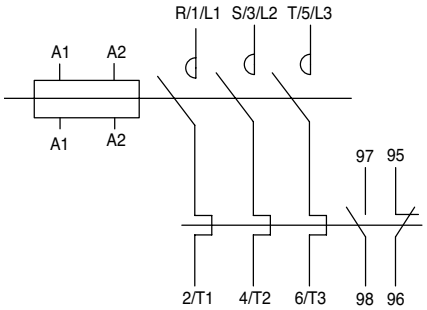

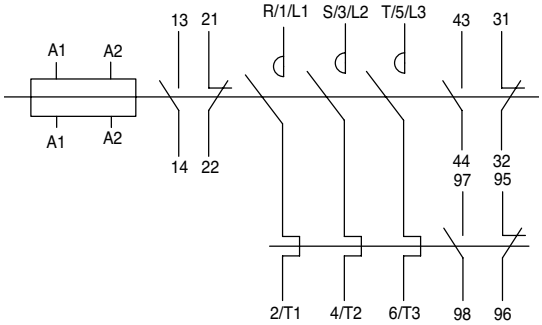

MS-185a~800a

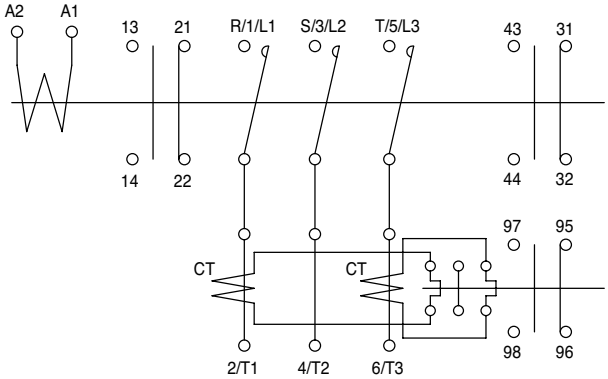

Contact arrangement

Reversing contactors

MC-6aR~150aR

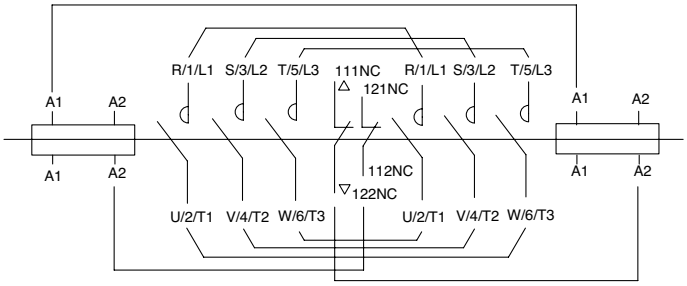

MC-185aR~800aR

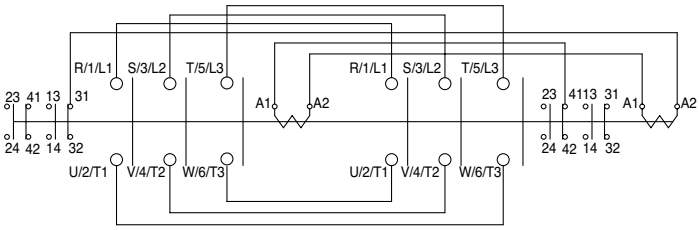

MS-6aR~150aR

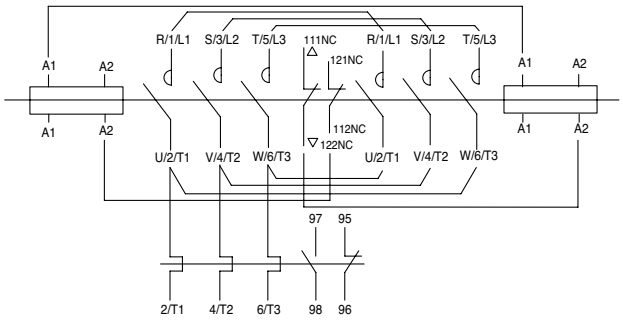

MS-185aR~400aR

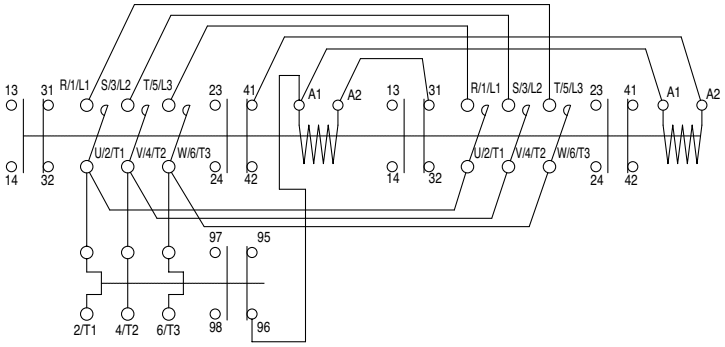

Contactors (4-Pole)

MC-6a/4~85a/4

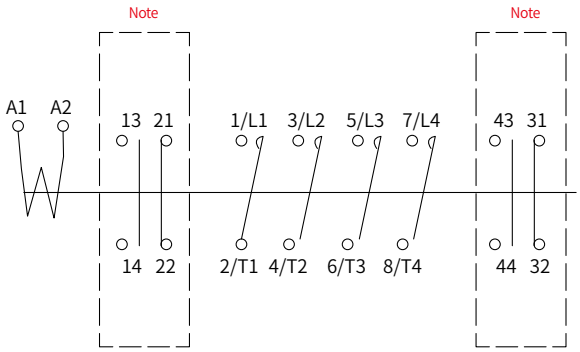

Note: For auxiliary contacts 2a2b

MC-100a/4~800a/4

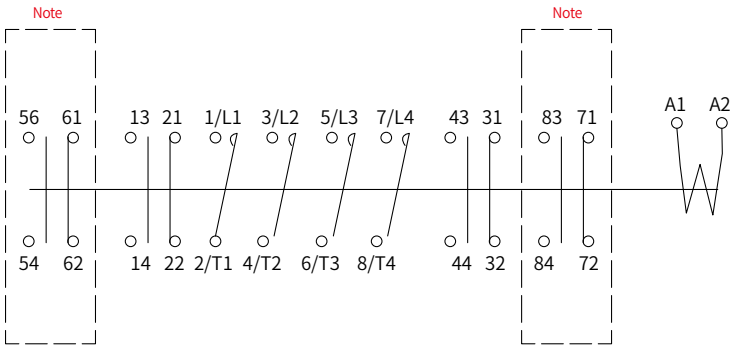

Note: For auxiliary contacts 4a4b

Meta-MEC and Metasol MC comparison table

	Type			MC-6a	MC-9a	MC-12a	MC-18a	MC-9b	MC-12b	MC-18b	MC-22b	MC-32a	MC-40a	MC-50a	MC-65a
Manufactured products	Metasol MC	Current and power AC3	200~240V	2.2kW 9A	2.5kW 11A	3.5kW 13A	4.5kW 18A	2.5kW 11A	3.5kW 13A	4.5kW 18A	5.5kW 22A	7.5kW 32A	11kW 40A	15kW 55A	18.5kW 65A
			380~440V	3kW 7A	4kW 9A	5.5kW 12A	7.5kW 18A	4kW 9A	5.5kW 12A	7.5kW 18A	11kW 22A	15kW 32A	18.5kW 40A	22kW 50A	30kW 65A
			500~550V	3kW 6A	4kW 7A	7.5kW 12A	7.5kW 13A	4kW 7A	7.5kW 12A	7.5kW 13A	15kW 20A	18.5kW 28A	22kW 32A	30kW 43A	33kW 60A
		Auxiliary (Standard)		1NO or 1NC				1NO1NC				-		-	
		Mounting size		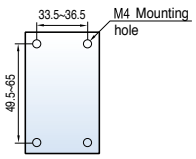				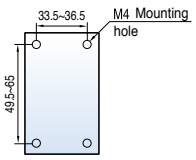				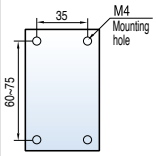		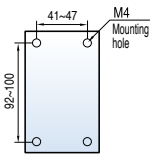	
		Weight (kg)		0.33				0.34				0.4		0.9	
		Demensions(W×H×D)		45×73.5×80.4				45×73.5×87.4				45×83×90		55×106×119	

	Type			-	GMC-9	GMC-12	GMC-18	GMC-22	GMC-32	GMC-40	GMC-50	GMC-65
Discontinued priducts	Meta-MEC MC	Current and power AC3	200~220V	-	2.5kW 11A	3.5kW 13A	4.5kW 18A	5.5kW 22A	7.5kW 32A	11kW 40A	15kW 55A	18.5kW 65A
			380~440V	-	4kW 9A	5.5kW 12A	7.5kW 18A	11kW 22A	15kW 32A	18.5kW 40A	22kW 50A	30kW 65A
			500~550V	-	4kW 7A	7.5kW 12A	7.5kW 13A	15kW 22A	18.5kW 28A	22kW 32A	30kW 43A	33kW 60A
		Auxiliary (Standard)		-	1NO1NC	1NO1NC	1NO1NC	1NO1NC	2NO2NC	2NO2NC	2NO2NC	2NO2NC
		Mounting size		-	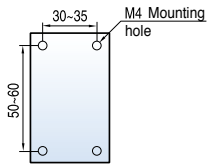				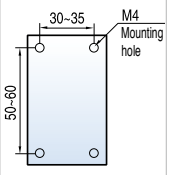		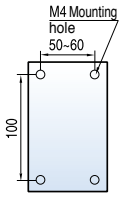	
		Weight (kg)		-	0.33		0.37		0.45		1	
		Demensions(W×H×D)		-	44×80×86.8				68×82×94.6		94×122×115.7	
	Compatibility with Metasol			-	○				▲		▲	

Note: Marks of compatibility
○: can be compatible
▲: compatible when applied the bracket
×: can't be compatible(have to use bracket)

Type				MC-75a	MC-85a	MC-100a	MC-130a	MC-150a	MC-185a	MC-225a	MC-265a	MC-330a	MC-400a	MC-500a	MC-630a	MC-800a
Manufactured products	Metasol MC	Current and power AC3	200~240V	22 kW	25kW	30kW	37kW	45kW	55kW	75kW	80kW	90kW	125kW	147kW	190kW	220kW
				75A	85A	105A	130A	150A	185A	225A	265A	330A	400A	500A	630A	800A
			380~440V	37 kW	45kW	55kW	60kW	75kW	90kW	132kW	147kW	160kW	200kW	265kW	330kW	440kW
				75A	85A	105A	130A	150A	185A	225A	265A	330A	400A	500A	630A	800A
			500~550V	37 kW	45 kW	55kW	60kW	70kW	110kW	132kW	147kW	160kW	225kW	265kW	330kW	500kW
				64A	75A	85A	90A	100A	180A	200A	225A	280A	350A	400A	500A	720A
		Auxiliary (Standard)		-			-		2NO2NC		2NO2NC			2NO2NC		
		Mounting size		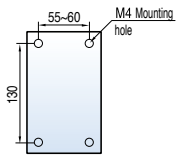			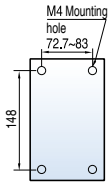		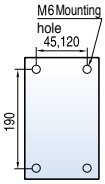		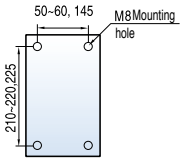			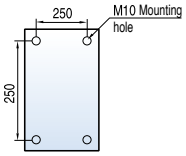		
		Weight (kg)		1.6			2.4		5.4		9.2			22.4		
		Demensions(W×H×D)		70×140×135.8			95×158×130.3		138×203×185.1		163×243×204.4			285×312×245.3		

Type				GMC-75	GMC-85	GMC-100	GMC-125	GMC-150	GMC-180	GMC-220	-	GMC-300	GMC-400	-	GMC-600	GMC-800
Discontinued prducts	Meta-MEC MC	Current and power AC3	200~220V	22kW	25kW	30kW	37kW	45kW	55kW	75kW	-	90kW	125kW	-	190kW	220kW
				75A	85A	105A	125A	150A	180A	250A		300A	400A		630A	800A
			380~440V	37kW	45kW	55kW	60kW	75kW	90kW	132kW	-	160kW	200kW	-	330kW	440kW
				75A	85A	105A	120A	150A	180A	250A		300A	400A		630A	800A
			500~550V	37kW	45kW	55kW	60kW	90kW	110kW	132kW	-	160kW	225kW	-	330kW	500kW
				64A	75A	85A	90A	140A	180A	200A		250A	350A		500A	720A
		Auxiliary (Standard)		2NO2NC	2NO2NC	2NO2b	2NO2NC	2NO2NC	2NO2NC	2NO2NC		2NO2NC	2NO2NC		2NO2NC	2NO2NC
		Mounting size		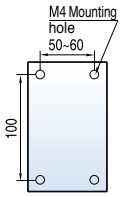		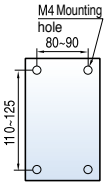		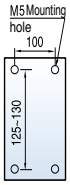	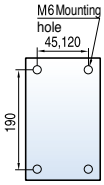		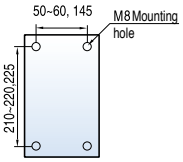			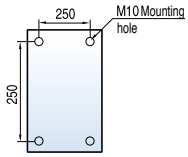		
		Weight (kg)		1		2.9		3.4	5.4		-	9.2		-	22	
		Demensions(W×H×D)		94×122×115.7		100×157.4×146.5		120×166×157	138×203×181		-	163×243×198		-	285×290×242	
	Compatibility with Metasol			▲		×	×		○		-	○		-	○	

Note: Marks of compatibility
○: can be compatible
▲: compatible when applied the bracket
×: can't be compatible(have to use bracket)

Meta-MEC and Metasol MS comparison table

Type				MS-6a	MS-9a	MS-12a	MS-18a	MS-9b	MS-12b	MS-18b	MS-22b	MS-32a	MS-40a	MS-50a	MS-65a
Manufactured products	Metasol MC	Current and power AC3	200~240V	2.2kW 9A	2.5kW 11A	3.5kW 13A	4.5kW 18A	2.5kW 11A	3.5kW 13A	4.5kW 18A	5.5kW 22A	7.5kW 32A	11kW 40A	15kW 55A	18.5kW 65A
			380~440V	3kW 7A	4kW 9A	5.5kW 12A	7.5kW 18A	4kW 9A	5.5kW 12A	7.5kW 18A	11kW 22A	15kW 32A	18.5kW 40A	22kW 50A	30kW 65A
			500~550V	3kW 6A	4kW 7A	7.5kW 12A	7.5kW 13A	4kW 7A	7.5kW 12A	7.5kW 13A	15kW 20A	18.5kW 28A	22kW 32A	30kW 43A	33kW 60A
		Auxiliary (Standard)		1NO or 1NC				1NO1NC				-		-	
		Mounting size		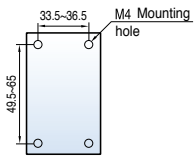				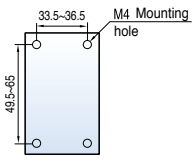				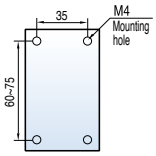		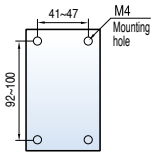	
		Weight (kg)		0.5				0.5				0.7		1.5	
		Demensions(W×H×D)		45×124×80.4				45×129.9×87.4				45×139.4×90		55×163.8×119	

Type				-	GMS-9	GMS-12	GMS-18	GMS-22	GMS-32	GMS-40	GMS-50	GMS-65
Discontinued priducts	Meta-MEC MC	Current and power AC3	200~220V	-	2.5kW 11A	3.5kW 13A	4.5kW 18A	5.5kW 22A	7.5kW 32A	11kW 40A	15kW 55A	18.5kW 65A
			380~440V	-	4kW 9A	5.5kW 12A	7.5kW 18A	11kW 22A	15kW 32A	18.5kW 40A	22kW 50A	30kW 65A
			500~550V	-	4kW 7A	7.5kW 12A	7.5kW 13A	15kW 22A	18.5kW 28A	22kW 32A	30kW 43A	33kW 60A
		Auxiliary (Standard)		-	1NO1NC	1NO1NC	1NO1NC	1NO1NC	2NO2NC	2NO2NC	2NO2NC	2NO2NC
		Mounting size		-	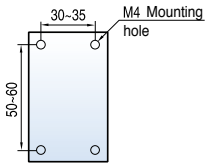				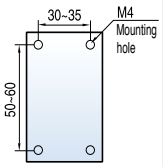		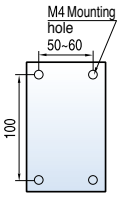	
		Weight (kg)		-	0.46		0.5		0.45		1.12	
		Demensions(W×H×D)		-	44×128.9×86.8				68×136.5×94.6		94×181.5×115.7	
	Compatibility with Metasol			-	○				×		×	

Note: Marks of compatibility
○: can be compatible
×: can't be compatible(have to use bracket)

Type				MS-75a	MS-85a	MS-100a	MS-130a	MS-150a	MS-185a	MS-225a	MS-265a	MS-330a	MS-400a	MS-500a	MS-630a	MS-800a
Manufactured products	Metasol MC	Current and power AC3	200~240V	22 kW	25kW	30kW	37kW	45kW	55kW	75kW	80kW	90kW	125kW	147kW	190kW	220kW
				75A	85A	105A	130A	150A	185A	225A	265A	330A	400A	500A	630A	800
			380~440V	37 kW	45kW	55kW	60kW	75kW	90kW	132kW	147kW	160kW	200kW	265kW	330kW	440kW
				75A	85A	105A	130A	150A	185A	225A	265A	330A	400A	500A	630A	800A
			500~550V	37 kW	45 kW	55kW	60kW	70kW	110kW	132kW	147kW	160kW	225kW	265kW	330kW	500kW
				64A	75A	85A	90A	100A	180A	200A	225A	280A	350A	400A	500A	720A
		Auxiliary (Standard)		-			-		2NO2NC		2NO2NC			2NO2NC		
		Mounting size		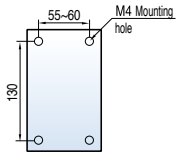			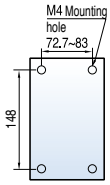		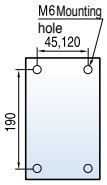		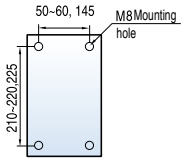			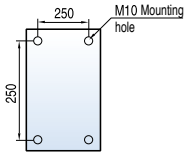		
		Weight (kg)		2.4			3		7.9		11.8			28		
		Demensions(W×H×D)		70×211.4×135.8			95×236.2×130.3		138×306.5×185.1		163×380×204.4			360×530×245.3		

Type				GMC-75	GMC-85	GMC-100	GMC-125	GMC-150	GMC-180	GMC-220	-	GMC-300	GMC-400	-	GMC-600	GMC-800
Discontinued priducts	Meta-MEC MC	Current and power AC3	200~220V	22kW	25kW	30kW	37kW	45kW	55kW	75kW	-	90kW	125kW	-	190kW	220kW
				75A	85A	105A	125A	150A	180A	250A		300A	400A		630A	800A
			380~440V	37kW	45kW	55kW	60kW	75kW	90kW	132kW	-	160kW	200kW	-	330kW	440kW
				75A	85A	105A	120A	150A	180A	250A		300A	400A		630A	800A
			500~550V	37kW	45kW	55kW	60kW	90kW	110kW	132kW	-	160kW	225kW	-	330kW	500kW
				64A	75A	85A	90A	140A	180A	200A		250A	350A		500A	720A
		Auxiliary (Standard)		2NO2NC	2NO2NC	2NO2NC	2NO2NC	2NO2NC	2NO2NC	2NO2NC	-	2NO2NC	2NO2NC	-	2NO2NC	2NO2NC
		Mounting size		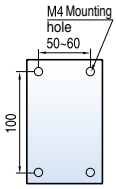		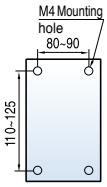		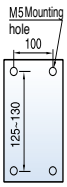	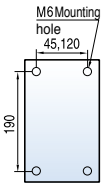		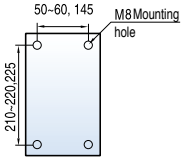			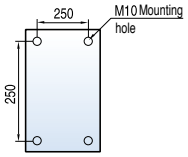		
		Weight (kg)		1.12		3.4		4	7.9		-	11.8		-	28	
		Demensions(W×H×D)		94×181.5×115.7		114×231.4×146.5		120×206.4×157	138×306.54×181		-	163×380×198		-	360×530×262	
	Compatibility with Metasol			×			×		○		-	○		-	○	

Note: Marks of compatibility
○: can be compatible
×: can't be compatible(have to use bracket)

Meta-MEC and Metasol relays comparison table

Type				MR-4	MR-6	MR-8
Manufactured products	Metasol MR	Auxiliary	(kW)	4NO, 3NO1NC, 2NO2NC 1NO3NC, 4NC	6NO, 5NO1NC, 4NO2NC 3NO3NC, 2NO4NC	8NO, 7NO1NC, 6NO2NC 5NO3NC, 4NO4NC
		Rated current (A)	120 V	6	6	6
		AC15	240 V	3	3	3
		Mounting size		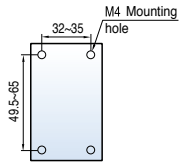	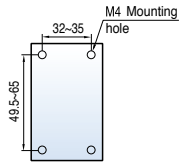	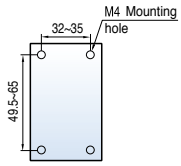
		Demensions(W×H×D)		45×73.5×79(96.6)	45×73.5×109.6(127.2)	45×73.5×109.6(127.2)
		Weight (kg)		0.284	0.315	0.339

Type				GMR-4(D)	GMR-6(D)	GMR-8(D)
Discontinued priducts	GMR	Auxiliary	(kW)	4NO, 3NO1NC, 2NO2NC 1NO3NC, 4NC	6NO, 5NO1NC, 4NO2NC 3NO3NC, 2NO4NC	8NO, 7NO1NC, 6NO2NC 5NO3NC, 4NO4NC
		Rated current (A)	AC110V	6	6	6
		AC11	AC220V	5	5	5
		Mounting size		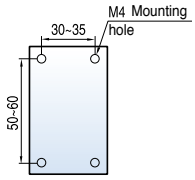	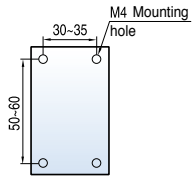	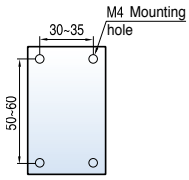
		Demensions(W×H×D)		44×80×86.8(113.2)	44×80×118.6(145)	44×80×118.6(145)
		Weight (kg)		0.34(0.56)	0.37(0.59)	0.39(0.61)

Meta-MEC and Metasol TOR comparison table

Manufactured products		Discontinued priducts	
MT		GTH (K)	
MT-12	0.14(0.1~0.16), 0.21(0.16~0.25), 0.33(0.25~0.4), 0.52(0.4~0.63), 0.82(0.63~1), 1.3(1~1.6), 2.1(1.6~2.5), 3.3(2.5~4), 5(4~6), 6.5(5~8), 7.5(6~9), 8.5(7~10), 11(9~13), 15(12~18), 19(16~22)	GTH(K)-22	0.14(0.1~0.16), 0.21(0.16~0.25), 0.33(0.25~0.4), 0.52(0.4~0.63), 0.82(0.63~1), 1.3(1~1.6), 2.1(1.6~2.5), 3.3(2.5~4), 5(4~6), 6.5(5~8), 7.5(6~9), 8.5(7~10), 11(9~13), 15(12~18), 19(16~22)
MT-32	0.14(0.1~0.16), 0.21(0.16~0.25), 0.33(0.25~0.4), 0.52(0.4~0.63), 0.82(0.63~1), 5(4~6), 6.5(5~8), 7.5(6~9), 8.5(7~10), 11(9~13), 15(12~18), 19(16~22), 22(18~26), 34(28~40)	GTH(K)-40	5(4~6), 6.5(5~8), 7.5(6~9), 8.5(7~10), 11(9~13), 15(12~18), 19(16~22), 22(18~26), 30(24~36), 34(28~40)
MT-63	5(4~6), 6.5(5~8), 7.5(6~9), 8.5(7~10), 11(9~13), 15(12~18), 19(16~22), 22(18~26), 30(24~36), 34(28~40), 42(34~50), 54(45~65)	GTH(K)-85	8.5(7~10), 11(9~13), 15(12~18), 19(16~22), 22(18~26), 30(24~36), 34(28~40), 42(34~50), 55(45~65), 65(54~75), 74(63~85)
MT-95	8.5(7~10), 11(9~13), 15(12~18), 19(16~22), 22(18~26), 30(24~36), 34(28~40), 42(34~50), 54(45~65), 65(54~75), 74(63~85), 83(70~95), 90(80~100)	GTH(K)-100	41(34~50), 48(39~57), 56(43~65), 67(54~80), 80(65~100), 107(85~125)
MT-150	42(34~50), 55(45~65), 65(54~75), 74(63~85), 93(80~105), 113(95~130), 130(110~150)	GTH(K)-150	41(34~50), 48(39~57), 56(43~65), 67(54~80), 80(65~100), 107(85~125), 130(100~150)
MT-225	80(65~100), 107(85~125), 130(100~160), 153(120~185), 200(160~240)	GTH(K)-220	80(65~100), 107(85~125), 130(100~160), 150(120~180), 200(160~240)
MT-400	107(85~125), 130(100~160), 153(120~185), 200(160~240), 265(200~330), 350(260~400)	GTH(K)-400	107(85~125), 130(100~160), 150(120~180), 200(160~240), 250(200~300), 350(260~400)
MT-800	265(200~300), 350(260~400), 515(400~630), 660(520~800)	GTH(K)-600	250(200~300), 350(260~400), 500(400~600), 660(520~800)

Compatibility bracket

- Mount Metasol MC on DIN rail bracket after installing the bracket on the panel
- Use a compatible bracket when replacing Meta-MEC with Metasol MC (without change in panel size)

	MP-40	MP-85
Manufactured products	MC-32a~40a	MC-50a~85a
Discontinued priducts	GMC-32~40	GMC-50~85
	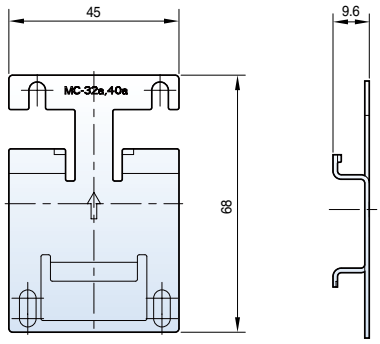	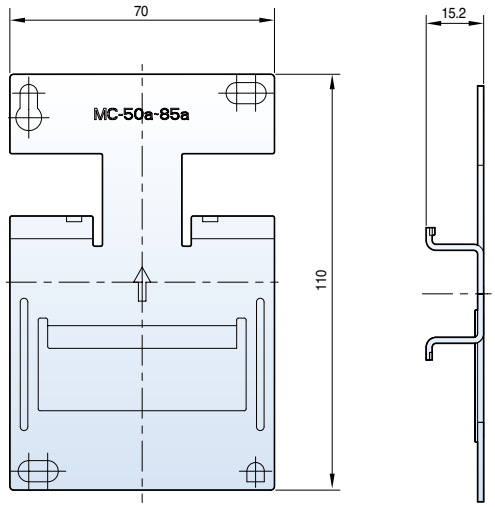

Certifications

Type	Type	Approvals					Certificates	
	Cerficate	-	IEC	UL	CSA	GB	IEC	KEPIC
	Mark and name		CE	c UL us U.S.A & cUL	CSA	CCC	DEMKO	
Type		Korea	Europe	U.S.A & Canada	Canada	China	Denmark	Korea
Metasol contactors	MC-6a	●	●	●	●	●	●	●
	MC-9a	●	●	●	●	●	●	●
	MC-12a	●	●	●	●	●	●	●
	MC-18a	●	●	●	●	●	●	●
	MC-9b	●	●	●	●	●	●	●
	MC-12b	●	●	●	●	●	●	●
	MC-18b	●	●	●	●	●	●	●
	MC-22b	●	●	●	●	●	●	●
	MC-32a	●	●	●	●	●	●	●
	MC-40a	●	●	●	●	●	●	●
	MC-50a	●	●	●	●	●	●	●
	MC-65a	●	●	●	●	●	●	●
	MC-75a	●	●	●	●	●	●	●
	MC-85a	●	●	●	●	●	●	●
	MC-100a	●	●	●	●	●	●	●
	MC-130a	●	●	●	●	●	●	●
	MC-150a	●	●	●	●	●	●	●
	MC-185a	●	●	●	●	●	●	●
	MC-225a	●	●	●	●	●	●	●
	MC-265a	●	●	●	●	●	●	●
	MC-330a		●	●	●	●	●	●
	MC-400a		●	●	●	●	●	●
	MC-500a		●	●	●	●	●	●
	MC-630a		●	●	●	●	●	●
	MC-800a		●	●	●	●	●	●
	MC-1260a		●	●			●	
	MC-1400a		●	●		●	●	
	MC-1700a		●	●		●	●	
	MC-2100a		●	●		●	●	
Thermal overload relays nondifferential (2-heater)	MT-12/2H		●				●	●
	MT-32/2H		●	●	●		●	●
	MT-63/2H		●	●	●		●	●
	MT-95/2H		●	●	●		●	●
	MT-150/2H		●	●	●		●	●
	MT-225/2H		●	●	●		●	●
	MT-400/2H		●	●	●		●	●
	MT-800/2H		●	●	●		●	●
Thermal overload relays nondifferential (3-heater)	MT-12/3H		●	●	●	●	●	●
	MT-32/3H		●	●	●	●	●	●
	MT-63/3H		●	●	●	●	●	●
	MT-95/3H		●	●	●	●	●	●
	MT-150/3H		●	●	●	●	●	●
	MT-225/3H		●	●	●	●	●	●
	MT-400/3H		●	●	●	●	●	●
	MT-800/3H		●	●	●	●	●	●
Thermal overload relays differential	MT-12/3K		●	●	●	●	●	●
	MT-32/3K		●	●	●	●	●	●
	MT-63/3K		●	●	●	●	●	●
	MT-95/3K		●	●	●	●	●	●
	MT-150/3K		●	●	●	●	●	●
	MT-225/3K		●	●	●	●	●	●
	MT-400/3K		●	●	●	●	●	●
	MT-800/3K		●	●	●	●	●	●
Thermal overload relays class 20	MT-12/3D		●	●	●	●	●	●
	MT-32/3D		●	●	●	●	●	●
	MT-63/3D		●	●	●	●	●	●
	MT-95/3D		●	●	●	●	●	●
	MT-150/3D		●	●	●	●	●	●
	MT-225/3D		●	●	●	●	●	●
	MT-400/3D		●	●	●	●	●	●
	MT-800/3D		●	●	●	●	●	●

Note: ●: Completion

Marine

Type	Type	Approvals							
	Mark and name	KR	LR	BV	GL	DNV	ABS	NK	RINA
		Korea	U.K	France	Germany	Norway	U.S.A	Japan	Italy
Metasol contactors	MC-6a	●	●	●	●	●	●	●	●
	MC-9a	●	●	●	●	●	●	●	●
	MC-12a	●	●	●	●	●	●	●	●
	MC-18a	●	●	●	●	●	●	●	●
	MC-9b	●	●	●	●	●	●	●	●
	MC-12b	●	●	●	●	●	●	●	●
	MC-18b	●	●	●	●	●	●	●	●
	MC-22b	●	●	●	●	●	●	●	●
	MC-32a	●	●	●	●	●	●	●	●
	MC-40a	●	●	●	●	●	●	●	●
	MC-50a	●	●	●	●	●	●	●	●
	MC-65a	●	●	●	●	●	●	●	●
	MC-75a	●	●	●	●	●	●	●	●
	MC-85a	●	●	●	●	●	●	●	●
	MC-100a	●	●	●	●	●	●	●	●
	MC-130a	●	●	●	●	●	●	●	●
	MC-150a	●	●	●	●	●	●	●	●
	MC-185a	●	●	●	●	●	●	●	●
	MC-225a	●	●	●	●	●	●	●	●
	MC-265a	●	●	●	●	●	●	●	●
	MC-330a	●	●	●	●	●	●	●	●
	MC-400a	●	●	●	●	●	●	●	●
	MC-500a	●	●	●	●	●	●	●	●
	MC-630a	●	●	●	●	●	●	●	●
	MC-800a	●	●	●	●	●	●	●	●
Thermal overload relays nondifferential (2-heater)	MT-12/2H	●	●	●	●	●	●	●	●
	MT-32/2H	●	●	●	●	●	●	●	●
	MT-63/2H	●	●	●	●	●	●	●	●
	MT-95/2H	●	●	●	●	●	●	●	●
	MT-150/2H	●	●	●	●	●	●	●	●
	MT-225/2H	●	●	●	●	●	●	●	●
	MT-400/2H	●	●	●	●	●	●	●	●
	MT-800/2H	●	●	●	●	●	●	●	●
Thermal overload relays nondifferential (3-heater)	MT-12/3H	●	●	●	●	●	●	●	●
	MT-32/3H	●	●	●	●	●	●	●	●
	MT-63/3H	●	●	●	●	●	●	●	●
	MT-95/3H	●	●	●	●	●	●	●	●
	MT-150/3H	●	●	●	●	●	●	●	●
	MT-225/3H	●	●	●	●	●	●	●	●
	MT-400/3H	●	●	●	●	●	●	●	●
	MT-800/3H	●	●	●	●	●	●	●	●
Thermal overload relays differential	MT-12/3K	●	●	●	●	●	●	●	●
	MT-32/3K	●	●	●	●	●	●	●	●
	MT-63/3K	●	●	●	●	●	●	●	●
	MT-95/3K	●	●	●	●	●	●	●	●
	MT-150/3K	●	●	●	●	●	●	●	●
	MT-225/3K	●	●	●	●	●	●	●	●
	MT-400/3K	●	●	●	●	●	●	●	●
	MT-800/3K	●	●	●	●	●	●	●	●
Thermal overload relays class 20	MT-12/3D	●	●	●	●	●	●	●	●
	MT-32/3D	●	●	●	●	●	●	●	●
	MT-63/3D	●	●	●	●	●	●	●	●
	MT-95/3D	●	●	●	●	●	●	●	●
	MT-150/3D	●	●	●	●	●	●	●	●
	MT-225/3D	●	●	●	●	●	●	●	●
	MT-400/3D	●	●	●	●	●	●	●	●
	MT-800/3D	●	●	●	●	●	●	●	●

Note: ●: Completion

Headquarter
127 LS-ro (Hogye-dong) Dongan-gu, Anyang-si, Gyeonggi-Do, 14119, Korea

Seoul Office
LS Yongsan Tower, 92, Hangang-daero, Yongsan-gu, Seoul, 04386, Korea
TEL: 82-2-2034-4916, 4684, 4429

China

LS ELECTRIC (Dalian) Co., Ltd.
+86-411-8730-5872
china.dalian@lselectric.com.cn

LS ELECTRIC (Wuxi) Co., Ltd.
+86-510-6851-6666
china.wuxi@lselectric.com.cn

LS ELECTRIC (Lishui) Co., Ltd.
+86-578-6866-780
china.lishui@lselectric.com.cn

Shanghai Office
+86-21-5237-9977
china@lselectric.com.cn

Beijing Office
+86-10-5095-1631
china@lselectric.com.cn

Guangzhou Office
+86-20-3818-2883
china@lselectric.com.cn

Qingdao Office
+86-532-8501-2065
china@lselectric.com.cn

Chengdu Office
+86-28-8670-3201
china@lselectric.com.cn

Nanjing Office
+86-25-84 67-0005
china@lselectric.com.cn

India

India Office
+91-80-6142-9108
Info_india@ls-electric.com

Indonesia

PT. LS ELECTRIC INDONESIA
+62-21-2933-7614
indonesia@ls-electric.com

PT SYMPHOS ELECTRIC
+62-81-1900-1474
marketing@symphos-weltraf.com

Italy

Italy office
+39-030-8081-833
italia@ls-electric.com

Japan

LS ELECTRIC Japan Co., Ltd.
+81-3-6268-8241
japan@ls-electric.com

Tokyo Office
+81-3-6268-8241
tokyo@ls-electric.com

Netherlands

LS ELECTRIC Europe B.V.
+31-20-654-1424
europartner@ls-electric.com

Russia

Moscow Office
+7-499-682-6130
info@lselectric-ru.com

Singapore

Singapore Office
+65-6958-8162
singapore@ls-electric.com

Spain

LS ELECTRIC IBERIA S.L.U.
+34-910-28-02-74
iberia@ls-electric.com

Thailand

Bangkok Office
+66-2-128-0295
thailand@ls-electric.com

Türkiye

LS ELECTRIC Türkiye Co., Ltd.
+90-212-806-1252
turkiye@ls-electric.com

U.A.E

LS ELECTRIC Middle East FZE (Dubai)
+971-4-886-5360
middleeast@ls-electric.com

USA

LS ELECTRIC America Inc.
+1-800-891-2941
sales.us@lselectricamerica.com

LS ENERGY SOLUTIONS LLC
+1-980-221-0654
info@ls-es.com

MCM Engineering II
+1-435-865-0125
sales.us@lselectricamerica.com

America Western Office
+1-949-333-3140
america@ls-electric.com

America Bastrop Campus
+1-800-891-2941 EXT 2
power_support.us@lselectricamerica.com

Vietnam

LS ELECTRIC Vietnam Co., Ltd.
+84-222-2221-110
vietnam@ls-electric.com

Hanoi Office
+84-24-6275-8054
vietnam@ls-electric.com

Ho Chi Minh Office
+84-3823-7890
vietnam@ls-electric.com

DIGITAL SUPPORT HUB

LSE LENS
Scan the QR code to instantly access product materials

Product Finder
Quickly discover the best-fit product for your needs

Product Match Guide
A quick and easy tool for product comparison

Download Center
Instantly access datasheets, manuals, and CAD files

Tech Hub-Youtube
Watch trusted tutorials and product guides from real experts

Specifications in this catalog are subject to change without notice due to continuous product development and improvement

ⓒ 2008. 10 LS ELECTRIC Co., Ltd. All rights reserved. / English (38) 2025. 12 Human Power

www.ls-electric.com